ORDER NO. AD9809168C2

Service Manual

Stereo Power Amplifier

Amplifier

SE-A3000

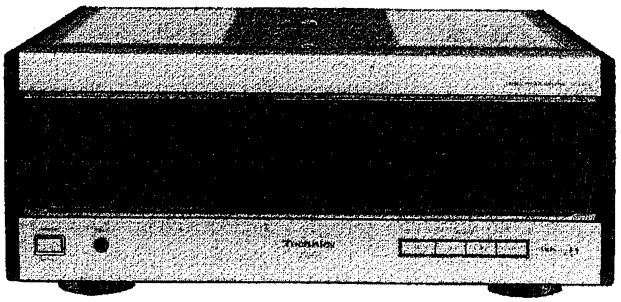

Colour
(N).....Gold Type

Areas
(E) ..... Europe.
(EB) ..... Great Britain.
(EG)..... Germany.

Specifications (DIN 45 500)

Power AMP Section

20 Hz – 20 kHz continuous power output	
both channels driven	2×100 W (8 Ω)
	2×140 W (4 Ω)
1 kHz continuous power output	
both channels driven (THD: 1 %)	2×110 W (8 Ω)
	2×160 W (4 Ω)
63 Hz – 12.5 kHz continuous power output	
both channels driven (THD: 0.7 %)	2×105 W (8 Ω)
	2×145 W (4 Ω)
Total harmonic distortion	
rated power at 20 Hz – 20 kHz	0.01 % (8 Ω)
	0.02 % (4 Ω)
rated power at 1 kHz	0.003 % (8 Ω)
	0.005 % (4 Ω)
half power at 20 Hz – 20 kHz	0.01 % (8 Ω)
Intermodulation distortion (50 Hz: 7 kHz = 4 : 1, SMPTE)	
rated power	0.005 % (8 Ω)
Power bandwidth (both channels driven)	
–3 dB, THD 0.05 %	5 Hz – 80 kHz (8 Ω)
Residual hum and noise	0.15 mV
Damping factor	100 (8 Ω)
	50 (4 Ω)
Headphones output level/impedance	680 mV/330 Ω
Load impedance	
A or B	4 Ω – 16 Ω
A and B	8 Ω – 16 Ω
Input sensitivity/impedance	
NORMAL, DIRECT	2 V/10 kΩ
	(INPUT LEVEL CONTROL Max.)
S/N (rated power, 4 Ω)	120 dB (129 dB, IHF '66)
Frequency response	
NORMAL	0.8 Hz – 150 kHz (+0, –3 dB)
	20 Hz – 20 kHz (+0, –0.2 dB)
	(INPUT LEVEL CONTROL Max.)
DIRECT	0.8 Hz – 150 kHz (+0, –3 dB)
	20 Hz – 20 kHz (+0, –0.2 dB)

General

Power supply	
For (E) and (EG) areas	AC 230V, 50 Hz
For (EB) area	AC 230 – 240 V, 50 Hz
Power consumption	330 W
Dimensions (W × H × D)	453 × 186 × 441 mm
Weight	25 kg

Notes:
1. Specifications are subject to change without notice. Weight and dimensions are approximate.
2. Total harmonic distortion is measured by the digital spectrum analyzer.
3. For (EB) area : The specification values given have been measured while using a 240 V power supply.

⚠WARNING
This service information is designed for experienced repair technicians only and is not designed for use by the general public. It does not contain warnings or cautions to advise non-technical individuals of potential dangers in attempting to service a product.
Products powered by electricity should be serviced or repaired only by experienced professional technicians. Any attempt to service or repair the product or products dealt with in this service information by anyone else could result in serious injury or death.

Technics®

© 1998 Matsushita Electric Industrial Co., Ltd.
All rights reserved. Unauthorized copying and distribution is a violation of law.

Contents

	Page
Before Repair	2
Protection Circuitry	2
Accessories	2
Caution for the unit	2
Caution for AC Mains Lead	3
Connections	4 – 7
Front Panel Controls	8
Operations	9
Operation Check and Component Replacement Procedures	10 – 15
Measurements and Adjustments	16
Schematic Diagram	17 – 22
Printed Circuit Board Diagram	23 – 30
Type Illustration of IC's, Transistors and Diodes	31
Wiring Connection Diagram	32, 33
Block Diagram	34, 35
Replacement Parts List	36 – 38
Cabinet Parts Location	39 – 41
Packaging	42

Before Repair

(1) Turn off the power supply. Using a 10 Ω, 10 W resistor, connect both ends of power supply capacitors (C701, C702, C703, C704) in order to discharge the voltage.

(2) Before turning the power supply on, after completion of repair, slowly apply the primary voltage by using a power supply voltage controller to make sure that the consumed current at 50 Hz in NO SIGNAL mode should be shown below with respect to supply voltage 230 V/240 V.

Power supply voltage	AC 230 V, 50 Hz	AC 240 V, 50 Hz
Consumed current	100 mA ~ 380 mA	100 mA ~ 385 mA

Protection Circuitry

The protection circuitry may have operated if either of the following conditions is noticed:

- No sound is heard when the power is switched ON.
- Sound stops during a performance.

The function of this circuitry is to prevent circuitry damage if, for example, the positive and negative speaker connection wires are "shorted", or if speaker systems with an impedance less than the indicated rated impedance of this unit are used.

If this occurs, follow the procedure outlined below:

1. Switch OFF the power.
2. Determine the cause of the cause of the problem and correct it.
3. Switch ON the power once again.

Note:

When the protection circuitry functions, the unit will not operate unless the power is first switched OFF and then ON again.

Accessories

- AC power supply cord
  (E) and (EG) areas : (RJA0062-K) 1

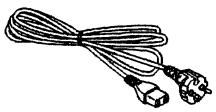

- AC power supply cord
  (EB) area : (RJA0063-K) 1

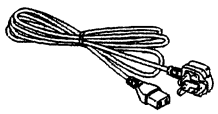

Caution for the unit

Do not place a tape deck or CD player on top of this unit. Heat radiated form the top of this unit may cause damage to the tape or CD software.

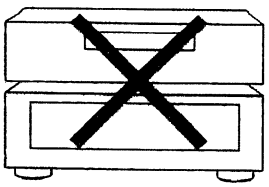

■ Caution for AC Mains Lead

(For United Kingdom)

("EB" area code model only)

For your safety, please read the following text carefully.

This appliance is supplied with a moulded three pin mains plug for your safety and convenience.
A 5-ampere fuse is fitted in this plug.
Should the fuse need to be replaced please ensure that the replacement fuse has a rating of 5-ampere and that it is approved by ASTA or BSI to BS1362.
Check for the ASTA mark ⟐ or the BSI mark ♡ on the body of the fuse.

If the plug contains a removable fuse cover you must ensure that it is refitted when the fuse is replaced.
If you lose the fuse cover the plug must not be used until a replacement cover is obtained.
A replacement fuse cover can be purchased from your local dealer.

CAUTION!
IF THE FITTED MOULDED PLUG IS UNSUITABLE FOR THE SOCKET OUTLET IN YOUR HOME THEN THE FUSE SHOULD BE REMOVED AND THE PLUG CUT OFF AND DISPOSED OF SAFELY.
THERE IS A DANGER OF SEVERE ELECTRICAL SHOCK IF THE CUT OFF PLUG IS INSERTED INTO ANY 13-AMPERE SOCKET.

If a new plug is to be fitted please observe the wiring code as shown below.
If in any doubt please consult a qualified electrician.

IMPORTANT

The wires in this mains lead are coloured in accordance with the following code:
Blue: Neutral, Brown: Live.
As these colours may not correspond with the coloured markings identifying the terminals in your plug, proceed as follows:
The wire which is coloured Blue must be connected to the terminal which is marked with the letter N or coloured Black or Blue.
The wire which is coloured Brown must be connected to the terminal which is marked with the letter L or coloured Brown or Red.

WARNING: DO NOT CONNECT EITHER WIRE TO THE EARTH TERMINAL WHICH IS MARKED WITH THE LETTER E, BY THE EARTH SYMBOL ⏚ OR COLOURED GREEN OR GREEN/YELLOW.

THIS PLUG IS NOT WATERPROOF—KEEP DRY.

Before use

Remove the connector cover.

How to replace the fuse

The location of the fuse differ according to the type of AC mains plug (figures A and B). Confirm the AC mains plug fitted and follow the instructions below.
Illustrations may differ from actual AC mains plug.

1. Open the fuse cover with a screwdriver.

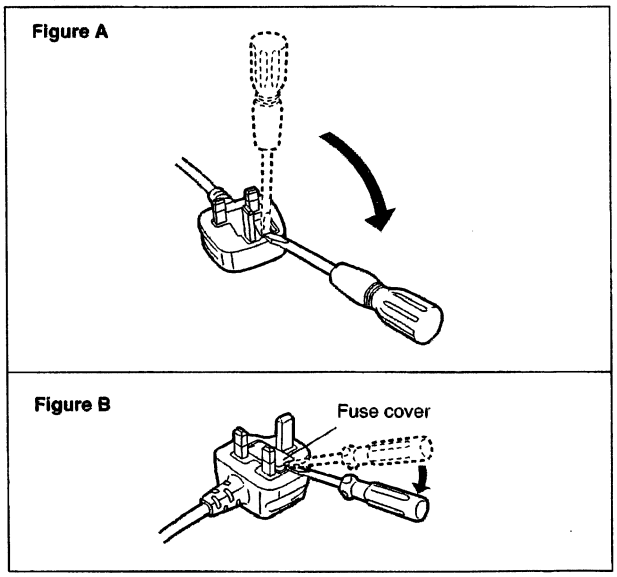

2. Replace the fuse and close or attach the fuse cover.

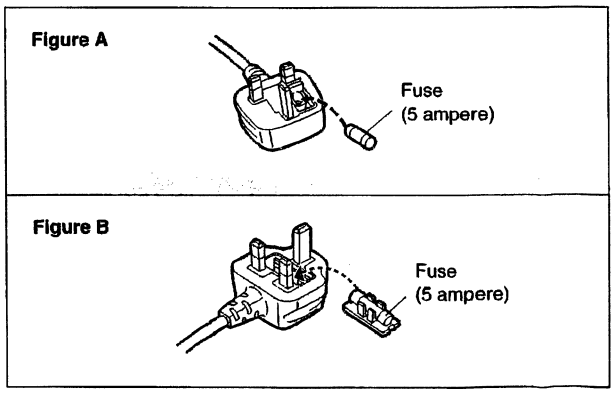

■ Connections

Connecting to a control amplifier

Make sure that the power supply for all components has been turned off before making any connections.

Refer to the operating instructions of the equipment to be connected.

Note

- Do not place books, etc., on top of this unit or block the heat radiation vents in any way.
- Do not stack the control amp (SU-C3000) on top of this unit. Heat from this unit can shorten the life of the battery.

"INPUT" terminals

The amplifier has two input systems: NORMAL and DIRECT.
When connected to the DIRECT terminals, audio signals do not pass through the level control circuit, so the sound is crisper.
You should use NORMAL input when it is difficult to control volume, for example, when the sound is too loud when you raise volume slightly from the control amplifier. Connect to the NORMAL terminal and set input level from the LEVEL CONTROL knob. Turning to the left lowers input, but normally leave it to "MAX".

Note

Do not use the NORMAL and DIRECT input terminals at the same time.

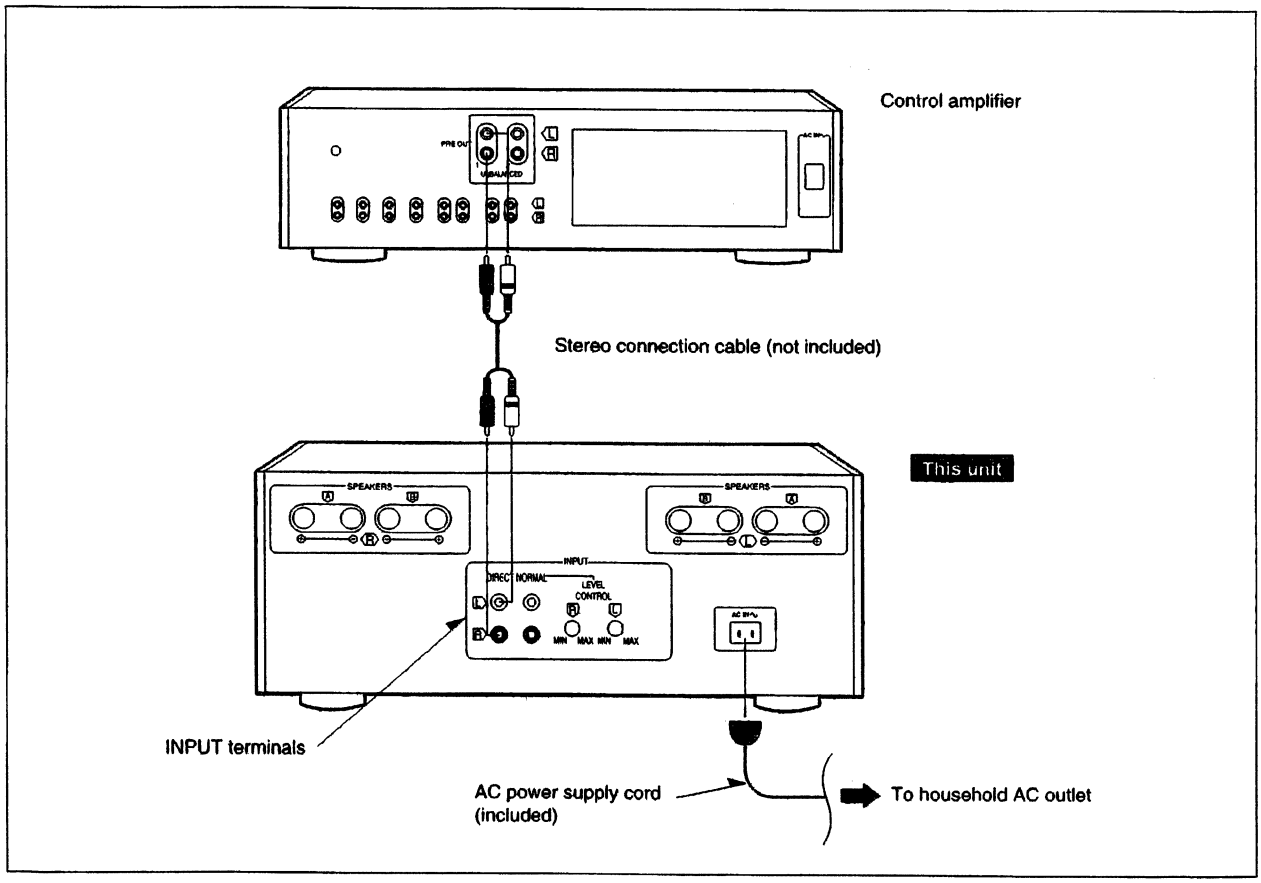

AC power supply cord

FOR UNITED KINGDOM ONLY
BE SURE TO READ THE CAUTION FOR THE AC MAINS LEAD ON PAGE 3 BEFORE CONNECTION.

Connect this cord after all other cables and cords are connected.

Insertion of Connector

Even when the connector is perfectly inserted, depending on the type of inlet used, the front part of the connector may jut out as shown in the drawing.
However there is no problem using the unit.

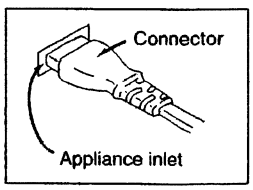

Concerning the speaker cables

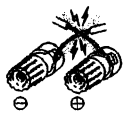

NO

Note
To prevent damage to circuitry, never short-circuit positive (+) and negative (–) speaker wires.

Connecting the speakers

Speaker cable
(not included)

Note
For details, see the operating instructions that came with your speaker system.

"B" terminals
For connection to a second pair of speakers.
If using separate treble and bass speakers, connect one set to the "A" terminals and the other set to the "B" terminals.

Speaker impedance:
A or B: 4-16 Ω
A and B: 8-16 Ω

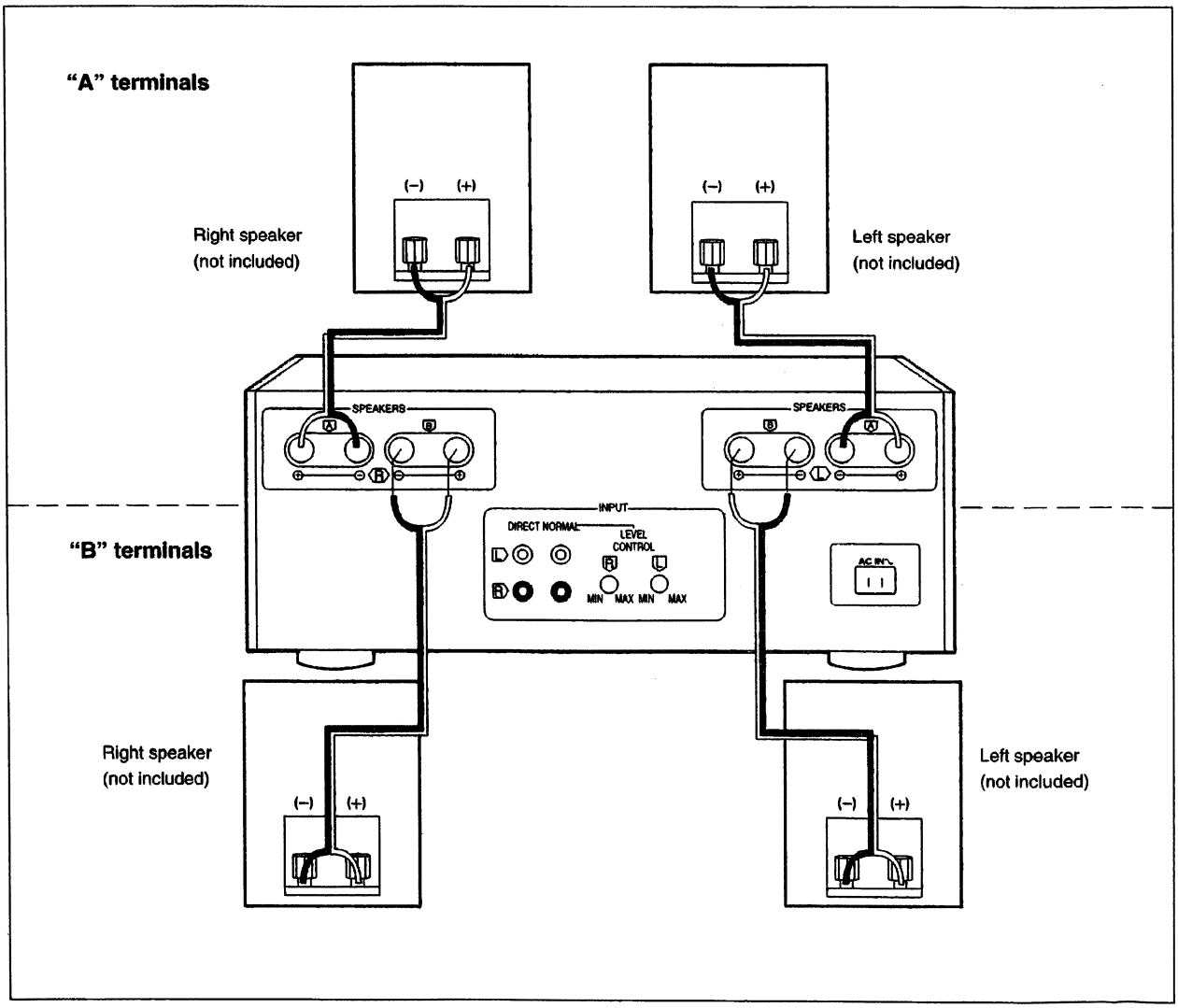

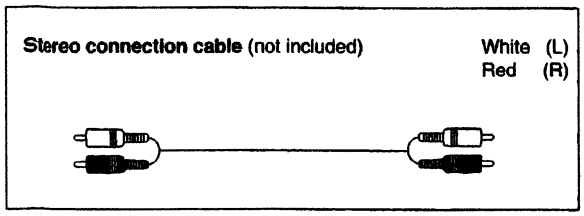

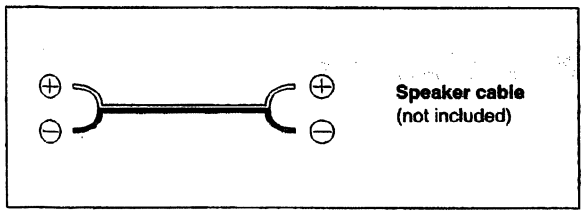

Connecting two power amplifiers (BI-AMP)

By connecting two of these units to a Technics control amp (SU-C3000), you can create a sound system to effectively improve sound quality. Various adjustments can be made to suit the room's acoustics and the peculiarities of your speakers. (The speakers in the examples have bi-wiring terminals.)

To use as left/right monaural amplifiers A

Connect the control amp to the NORMAL terminals on the two power amps (this unit × 2). This connection allows you to not only control the balance between the two speakers, but also to control the bass and treble output from the speakers. This improves separation of the left and right channels and thus sound orientation is also improved.

To use one amplifier for the high region and one for the low region B

Connect one set to the NORMAL terminals and one set to the DIRECT terminals for greater control over bass and treble balance. The illustration is an example of connection when treble is to be adjusted against bass sounds. Reverse the connections to the power amps if you want to adjust bass against treble.

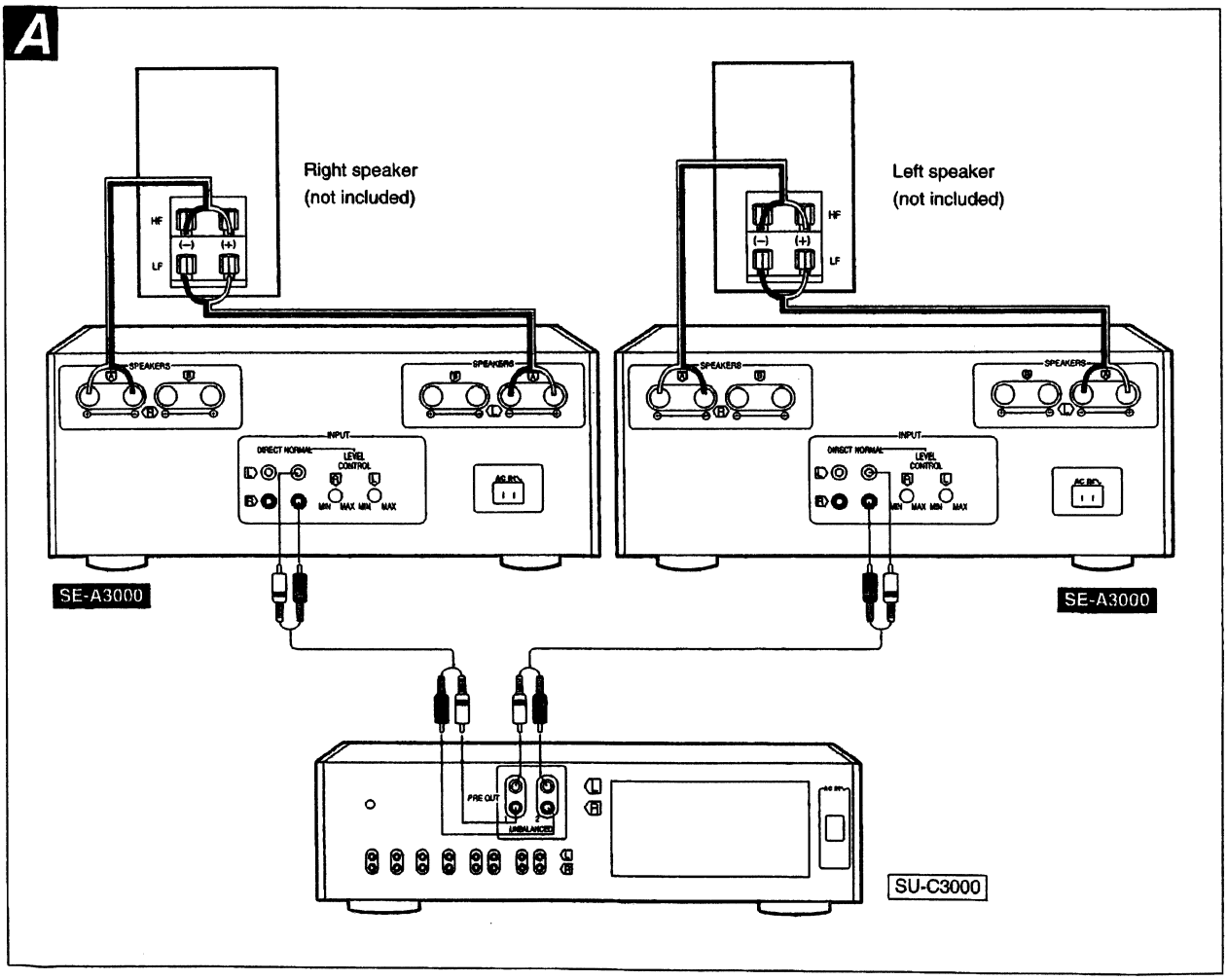

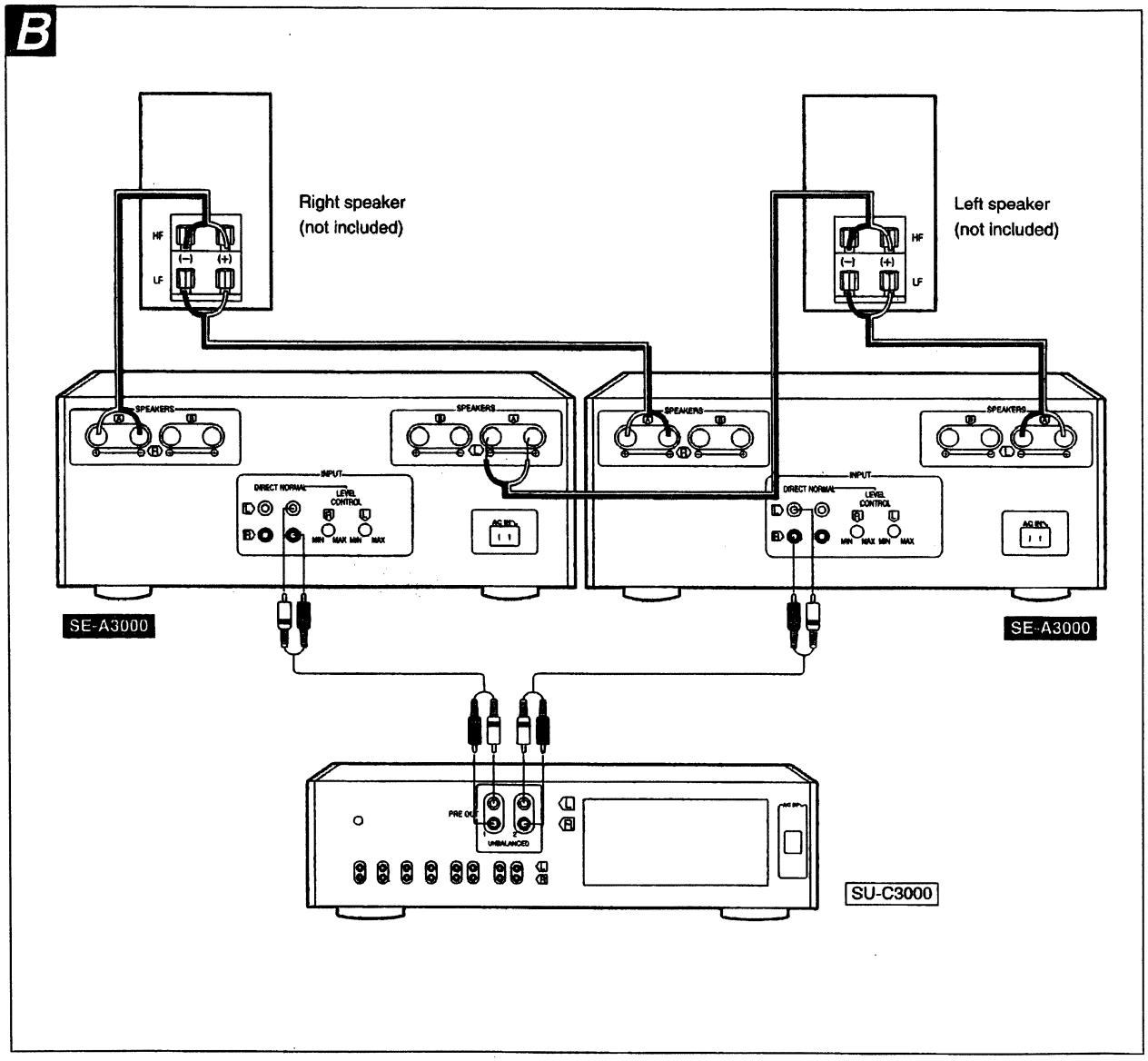
B
Right speaker
(not included)
Left speaker
(not included)
HF
LF
(−)
(+)
SPEAKERS
INPUT
DIRECT NORMAL
LEVEL CONTROL
MIN MAX MIN MAX
AC IN
SE-A3000
SE-A3000
PRE OUT
UNBALANCED
SU-C3000

■ Front Panel Controls

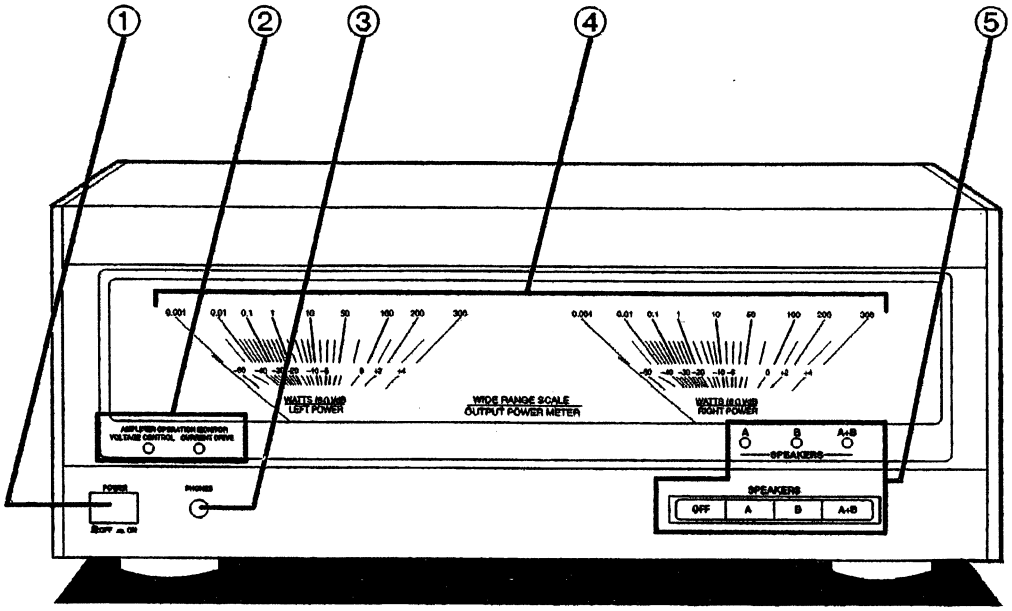

No.	Name

① Power switch
(POWER, ▬ OFF ▬ ON)

② Operation indicators
(AMPLIFER OPERATION MONITOR)
These indicators illuminate to indicate the operating condition of this unit.
VOLTAGE CONTROL:
Illuminates up when the power is switched on. Indicates that the voltage control amplifier is ready to operate.
CURRENT DRIVE:
Illuminates approximately 4 seconds after the voltage control amplifier indicator illuminates. Indicates that the main unit is ready to operate.
If an abnormal condition in the circuitry is detected, such as DC voltage appearing in the output, or a short-circuit of the positive (+) and negative (–) wires from the speaker terminals, the protection circuit functions and this indicator will not illuminate.

No.	Name

③ Headphones jack (PHONES)

④ Power meters
Indicate the output (watts) of this unit.
When speakers having an impedance of 8 Ω are connected, the output level will be as indicated. However, if the speaker impedance is 16 Ω, the output level will be one-half the indicated value, and if the impedance is 4 Ω, the output level will be double the indicated value.

$$\text{Actual output} = \text{mater indication} \times \frac{8\ (\Omega)}{\text{impedance of the speakers}\ (\Omega)}$$

⑤ Speaker selectors/Indicators
(SPEAKERS)

■ Operations

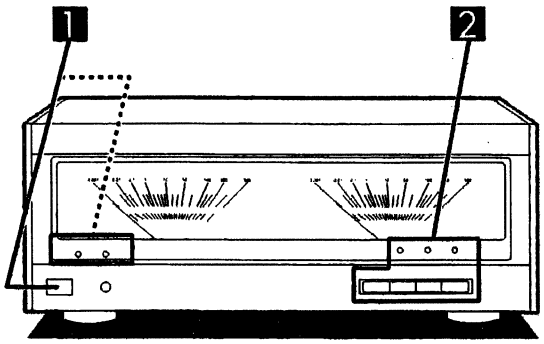

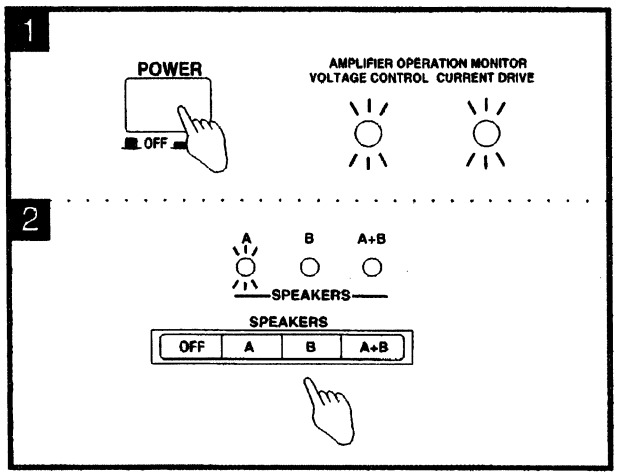

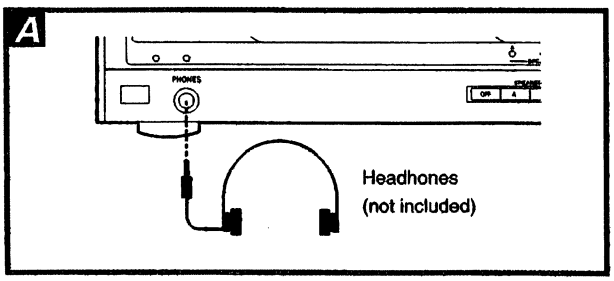

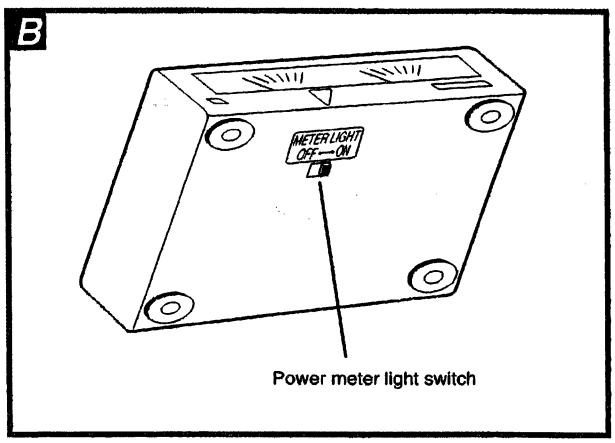

Before operating this unit

1. Set the volume on the control amplifier to the minimum position.
2. Switch on the power of the control amplifier.

1 **Press [POWER] to switch on the power of this unit.**

The operation indicators will illuminate.

2 **Select the speakers to be used.**

The corresponding speaker indicator will illuminate.

A: output from the "A" speaker terminals
B: output from the "B" speaker terminals
A + B: output from the "A" and "B" terminals
Carefully check the speaker terminals before making your speaker selection when two of these units are being used.

If the sound from the speakers is not wanted, set the speaker selector to the "OFF" position.

3 **Operate the tape deck, CD player, or other equipment and adjust the volume on the control amplifier.**

Note

This unit has very high output ability and could cause damage to speakers with low permissible input. Watch the power meters on this unit while adjusting the volume on the control amplifier, being careful not to exceed the permissible input of the speakers.

After you are finished

1. Reduce the volume at the control amplifier.
2. First turn off this unit, and then do the same for the control amplifier.

To listen through headphones A

Reduce the volume at the control amplifier, and then connect the headphones.
Plug type: 6.3mm stereo

If the sound from the speakers is not wanted, set the speaker selector to the "OFF" position.

Note

Avoid listening for prolonged periods of time to prevent hearing damage.

To turn the meter light off B

The unit is shipped with the light switch in the ON position.
It can be turned on or off to suit your preference.

Move the [METER LIGHT] switch to OFF.

Move it back to ON to turn the light on again.

■ Operation Checks and Component Replacement Procedures

NOTE 1. This section describes procedures for checking the operation of the major printed circuit boards and replacing the main components.

2. For reassembly after operation checks or replacement, reverse the respective procedures. Special reassembly procedures are described only when required.

3. [ ] Indicates parts No.

• Contents

■ **Checking Procedures for each P.C.B.** Page.
1. Checking for the speaker select logic P.C.B.. · · · · · · 10,11.
2. Checking for the current drive amp (L) P.C.B., current drive amp (R) P.C.B. and main P.C.B.. · · · · · · 11.
3. Checking for the voltage control amp (L) P.C.B. and voltage control amp (R) P.C.B.. · · · · · · 11,12.
4. Checking for the relay P.C.B.. · · · · · · 12.

■ **Main Component Replacement Procedures**
1. Replacement for the meter ass'y. · · · · · · 12,13.
2. Replacement for the power transistor. · · · · · · 13,14.
3. Replacement for the capacitor P.C.B.. · · · · · · 14.

■ **Wire arrangement for the lead wire and flat cable.** · · · · · · 14,15.

■ Checking Procedures for each P.C.B.

1. Checking for the speaker select logic P.C.B.

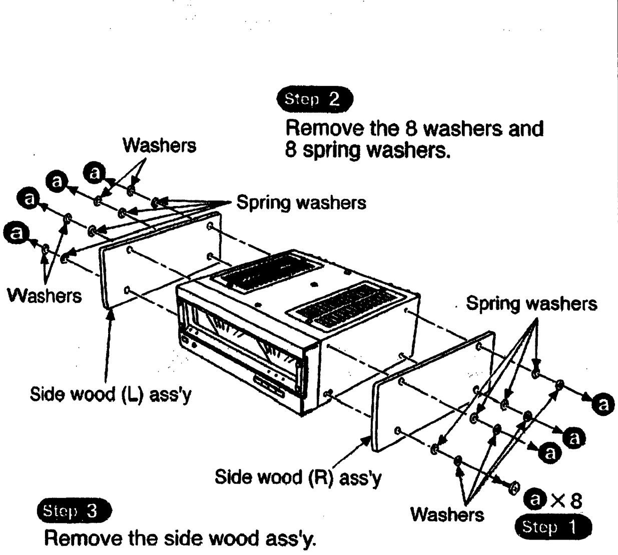

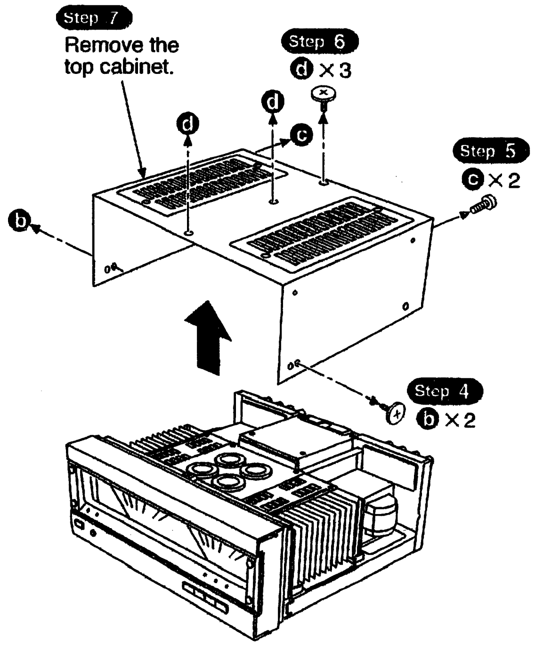

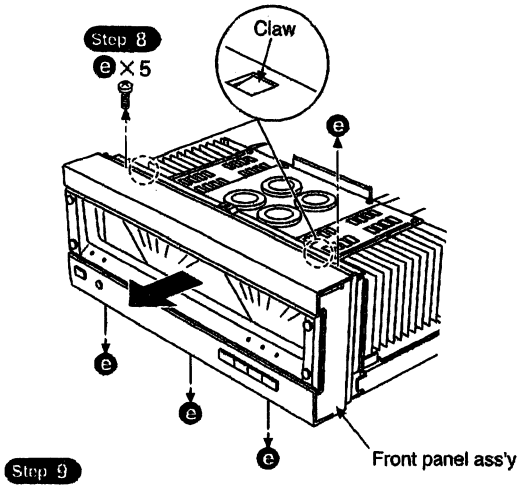

Release the 2 claws, and then remove the front panel ass'y.

· **Check the speaker select logic P.C.B. as shown below.**

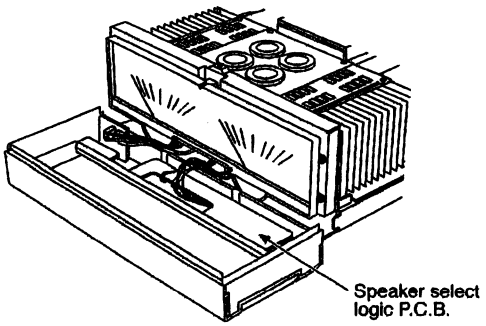

2. Checking for the current drive amp (L) P.C.B., current drive amp (R) P.C.B. and main P.C.B.

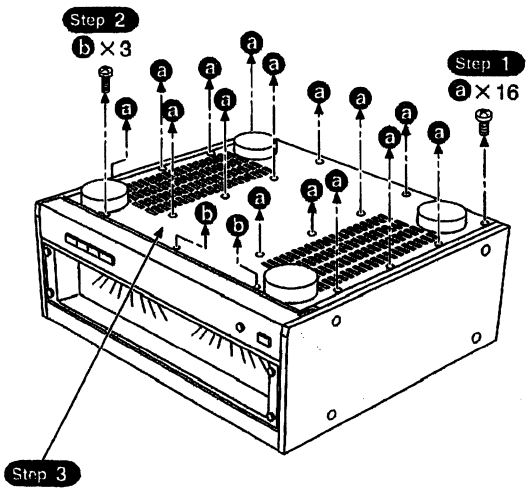

Remove the bottom cover.

· **Check the current drive amp (L) P.C.B., current drive amp (R) P.C.B. and main P.C.B. as shown below.**

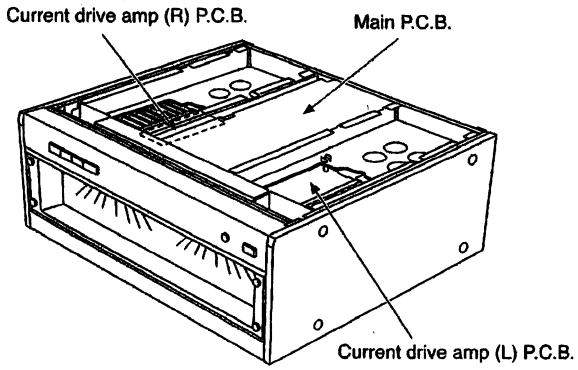

3. Checking for the voltage control amp (L) P.C.B. and voltage control amp (R) P.C.B.

· Follow the Step 1 ~ Step 7 in item 1 on checking procedure for each P.C.B. on page 10.

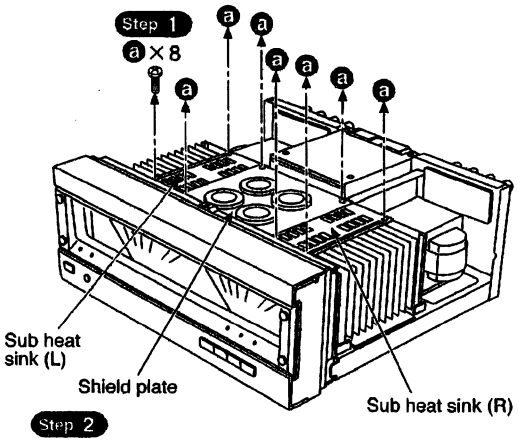

Remove the sub heat sink (L), sub heat sink (R) and shield plate.

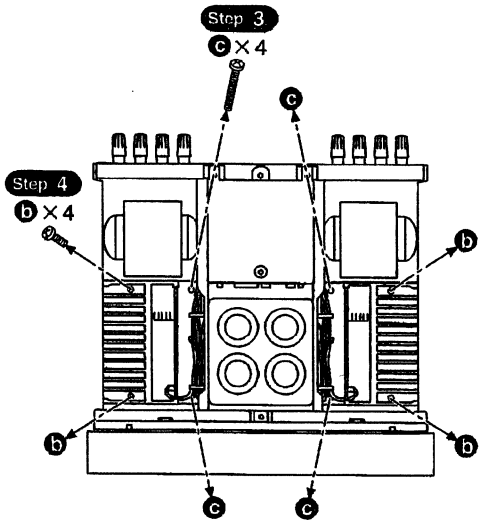

※ The below illustration shows the voltage control amp (L) P.C.B. of left side.
For the voltage control amp (R) P.C.B. of right side, follow the checking same as the (L) P.C.B..

Step 6
Move the heat sink in the direction of arrow.

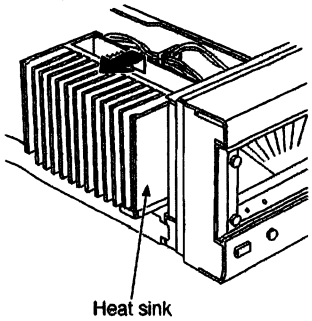

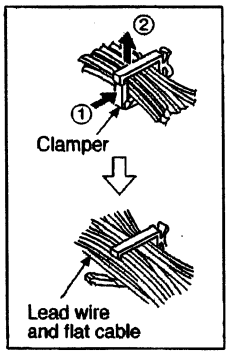

Step 5
Release the clamper, and then remove the lead wire and flat cable.

- **Check the voltage control amp (L) P.C.B. as shown below.**

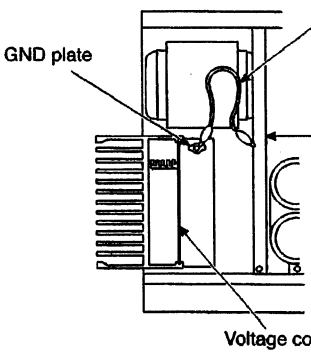

4. Checking for the relay P.C.B.

- Follow the Step 1 ~ Step 7 in item 1 on checking procedure for each P.C.B. on page 10.

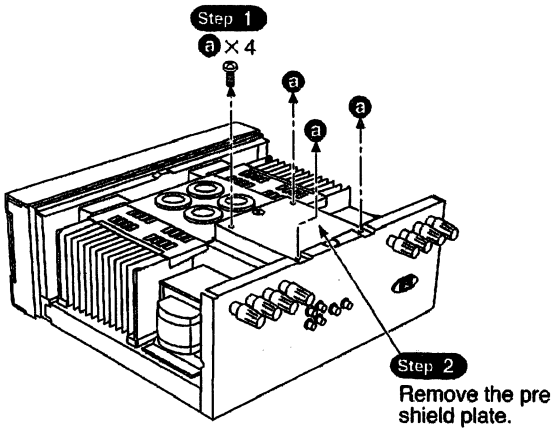

- **Check the relay P.C.B. as shown below.**

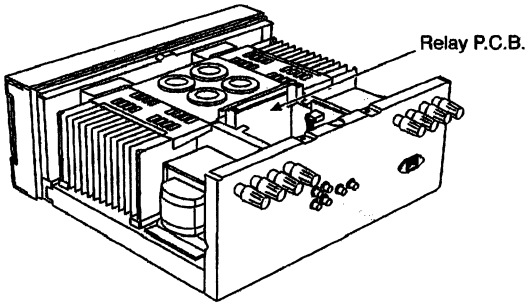

■ Main Component Replacement Procedures

1. Replacement for the meter ass'y

- Follow the Step 1 ~ Step 9 in item 1 on checking procedure for each P.C.B. on pages 10 and 11.

Step 1
Remove the 7 connectors.

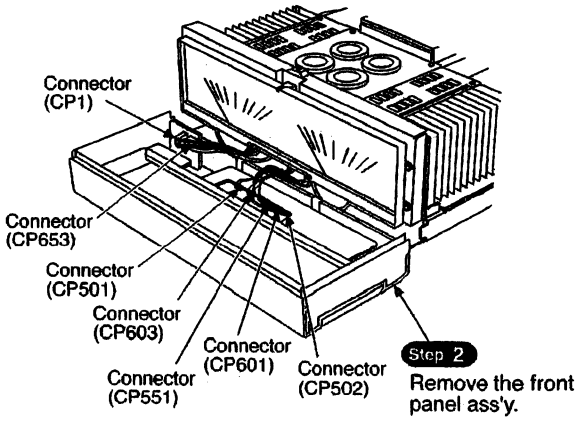

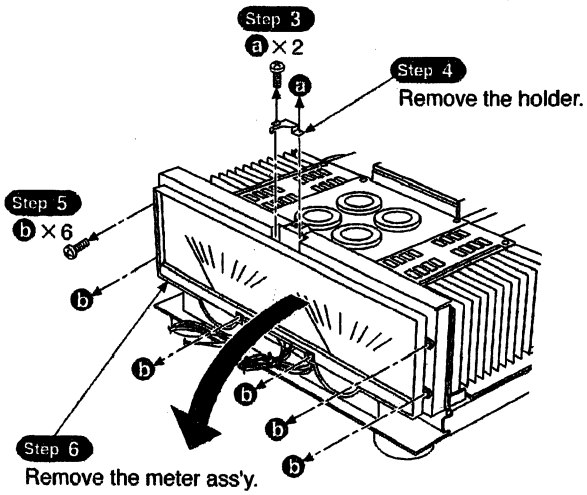

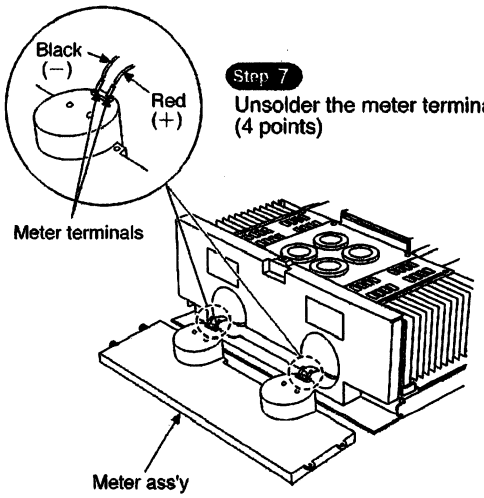

Step 7
Unsolder the meter terminal. (4 points)

2. Replacement for the power transistor

- Follow the Step 1 ~ Step 7 in item 1 on checking procedure for each P.C.B. on page 10.
- Follow the Step 1 ~ Step 5 in item 3 on checking procedure for each P.C.B. on pages 11 and 12.

Step 1
Pull out the voltage control amp (L) P.C.B. and voltage control amp (R) P.C.B..

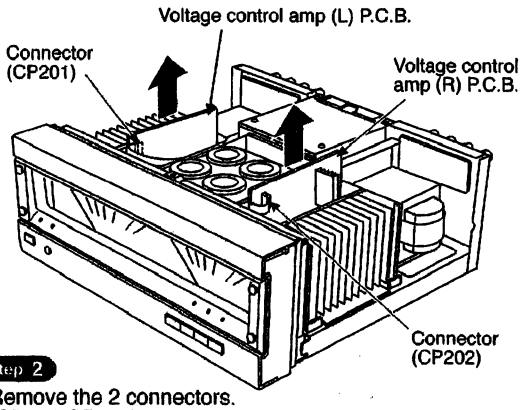

Step 2
Remove the 2 connectors. (CP201,CP202)

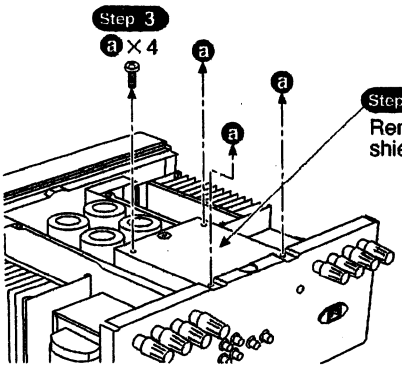

Step 4
Remove the pre shield plate.

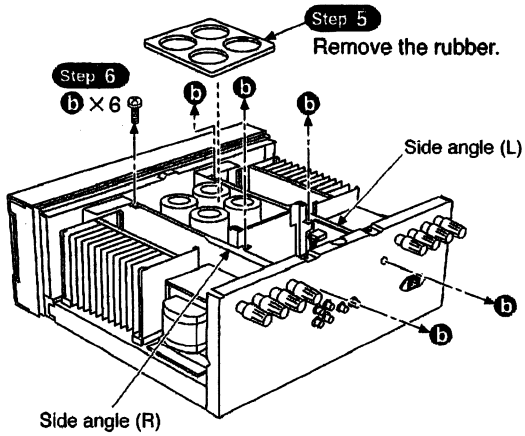

Step 5
Remove the rubber.

Step 7
Remove the side angle (L) and side angle (R).

Step 8
Remove the 10 connectors.

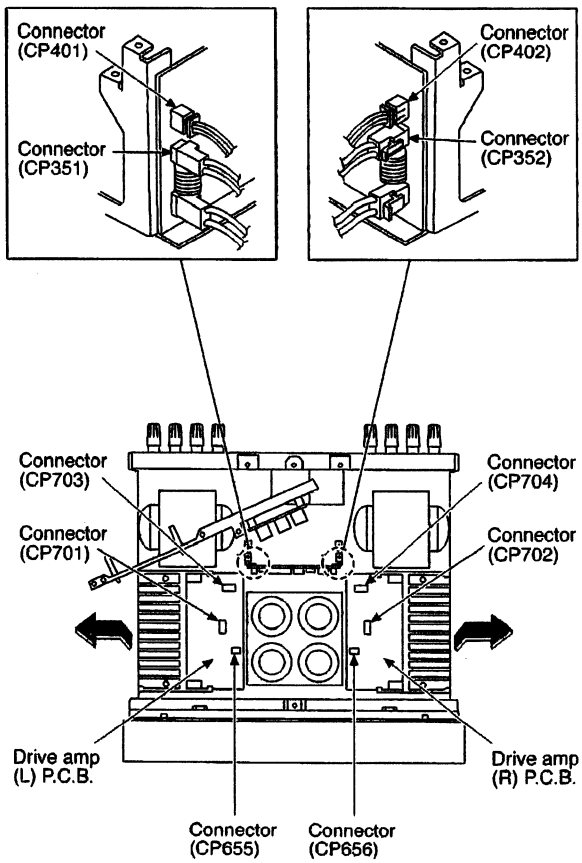

Step 9
Remove the drive amp (L) P.C.B. and drive amp (R) P.C.B..

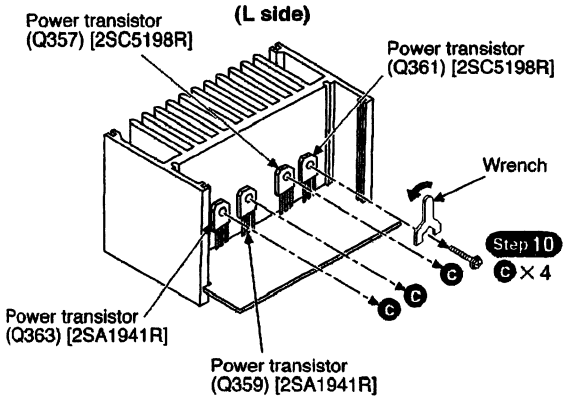

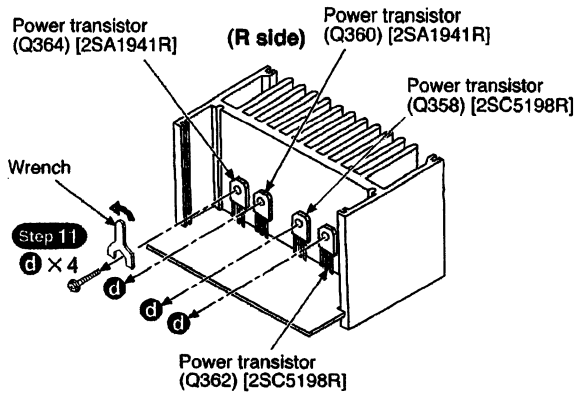

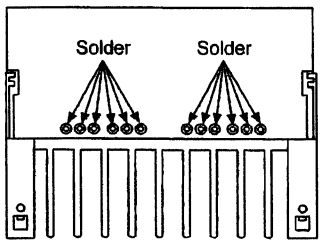

Step 12
Unsolder the transistor terminals.
(both L and R sides)

CAUTION

1. After replacing the power transistor, apply a sufficient quantity of compound grease (RFKX0002) between the heat sink and the power transistor.
   (Radiation of power transistor).
2. Tigten enough the screws (ⓒ, ⓓ) after replacing the power transistor. Otherwise, the heat radiation works little.

3. Replacement for the capacitor P.C.B.

- Follow the Step 1 ~ Step 7 in item 1 on checking procedure for each P.C.B. on page 10.
- Follow the Step 1 ~ Step 5 in item 3 on checking procedure for each P.C.B. on pages 11 and 12.
- Follow the Step 1 ~ Step 7 in item 2 on main component replacement procedures on page 13.

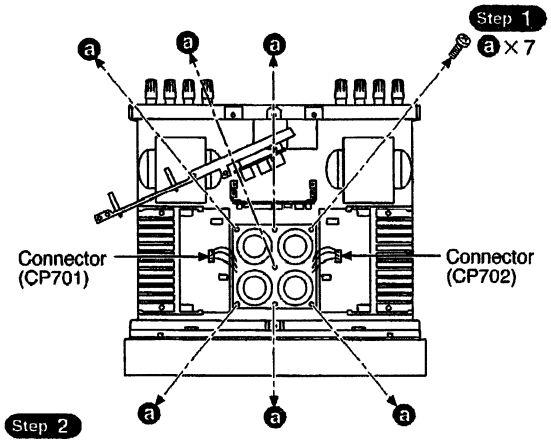

Step 2
Remove the 2 connectors.

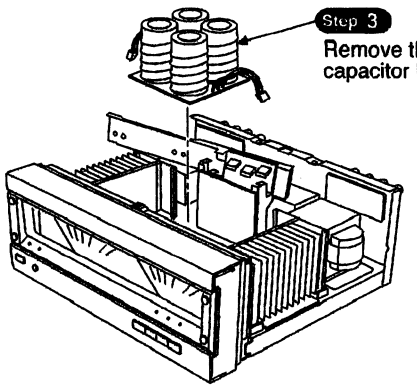

■ Wire arrangement for the lead wire and flat cable

1. Pass the lead wires and flat cable through the clamper as shown below.
2. Arrange the lead wires not to touch the rectifier diode.

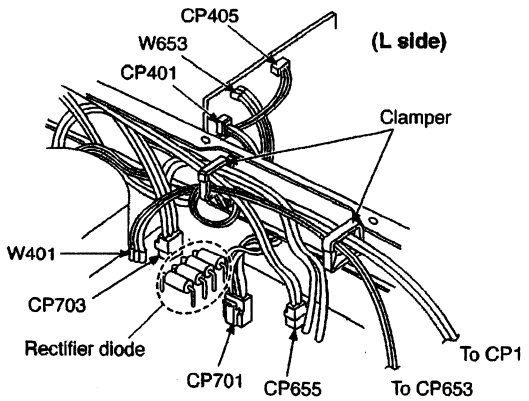

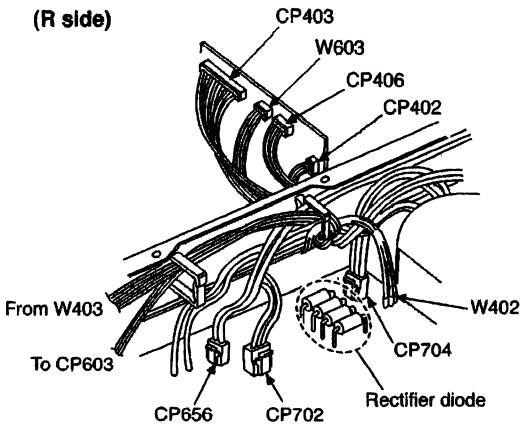

3. Take care not to damage the lead wire and flat cable.

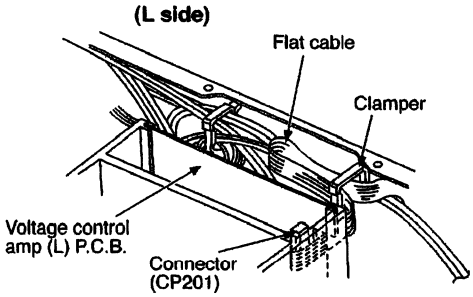

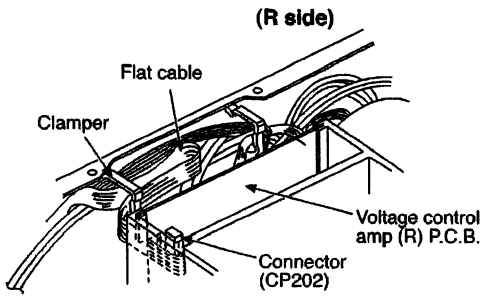

4. After installation of voltage control amp (L) P.C.B. and voltage control amp (R) P.C.B., pass the flat cable from connector (CP201, CP202) through the clamper.

■ Measurements and Adjustments

Measuring Instruments and Special Tools

- AC electronic voltmeter (AC EVM)×2
- DC electronic voltmeter (DC EVM)×2
- AF oscillator

V–AMP Icq Adjustment

1. Connect the measuring instruments as shown in Fig. 1.
2. Before turning on the set, adjust **VR251 (L-ch)** and **VR252 (R-ch)** to mechanical center position.
3. After turn on the power, adjust **VR251 (L-ch)**, **VR252 (R-ch)** so that the output value is within **70 ± 5 mV**. (One channel must be adjusted in 8 seconds.)

Note: Keep the voltage value over 30 mV. The voltage value under 30 mV may have small oscillation.

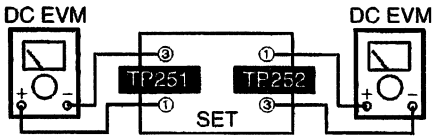

Fig. 1

C–AMP Icq Adjustment

1. Connect the measuring instruments as shown in Fig. 2.
2. Before turning on the set, adjust **VR301 (L-ch)** and **VR302 (R-ch)** to mechanical minimum position.
3. Turn on the power. Then wait for 1 minute 30 seconds. Adjust **VR301 (L-ch)**, **VR302 (R-ch)** so that the output value is within **3 ± 1 mV**.

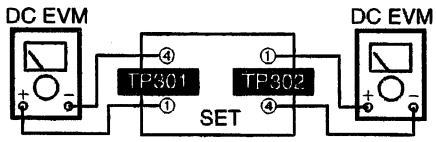

Fig. 2

Power Meter Adjustment

1. Connect the measuring instruments as shown in Fig. 3.
2. Before turning on the set, adjust **VR501 (L-ch)** and **VR502 (R-ch)** to mechanical center position. Then both channels of level control are set to maximum.
3. Turn on the power, make sure that the power meter is mechanically adjusted to **0** point.
4. Apply a **1 kHz** signal to the input terminal so that the output voltage of speaker terminal is **28.3 V** (adjust the signal level with the attenuator of AF oscillator).
5. Adjust **VR501 (L-ch)** and **VR502 (R-ch)** so that the power meter indicates **100 W**.

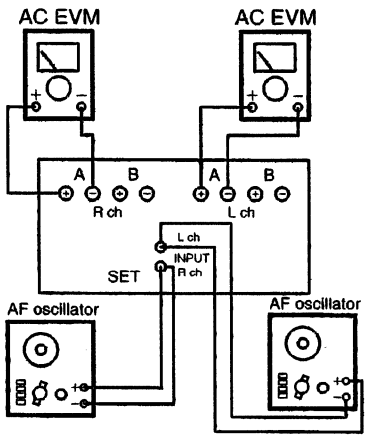

Fig. 3

Adjustment point

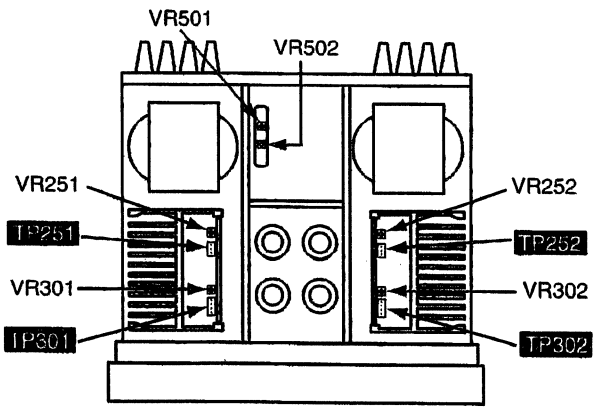

■ Schematic Diagram

		Page
A	INPUT TERMINAL CIRCUIT	18
B	LAMP (A) CIRCUIT	18
C	LAMP (B) CIRCUIT	18
D	MAIN CIRCUIT	18, 19
E	LIGHT SW CIRCUIT	18
F	SPEAKER SW CIRCUIT	19
G	LED CIRCUIT	19
H	SPEAKER SELECT LOGIC CIRCUIT	19
I	VOLTAGE CONTROL AMP (L) CIRCUIT	20, 21
J	VOLTAGE CONTROL AMP (R) CIRCUIT	20, 21
K	CURRENT DRIVE AMP (L) CIRCUIT	21
L	CURRENT DRIVE AMP (R) CIRCUIT	21
M	CAPACITOR CIRCUIT	21
N	RELAY CIRCUIT	22
O	SPEAKER TERMINAL (L) CIRCUIT	22
P	SPEAKER TERMINAL (R) CIRCUIT	22
Q	FUSE CIRCUIT	22
R	POWER SW CIRCUIT	22

- **This schematic diagram may be modified at any time with the development of new technology.**

Notes:
- **S1** : Power switch (POWER, ▟ OFF ▙ ON)
- **S551** : Power meter light switch (METER LIGHT)
- **S601** : Speaker select switch (SPEAKERS OFF)
- **S602** : Speaker select switch (SPEAKERS A)
- **S603** : Speaker select switch (SPEAKERS B)
- **S604** : Speaker select switch (SPEAKERS A+B)
- **VR191** : Input level control VR (LEVEL CONTROL L)
- **VR192** : Input level control VR (LEVEL CONTROL R)
- **VR251** : V-amp Icq adjustment VR (L ch)
- **VR252** : V-amp Icq adjustment VR (R ch)
- **VR301** : C-amp Icq adjustment VR (L ch)
- **VR302** : C-amp Icq adjustment VR (R ch)
- **VR501** : Power meter adjustment VR (L ch)
- **VR502** : Power meter adjustment VR (R ch)

- Indicated voltage values are the standard values for the unit measured by the DC electronic circuit tester (high-impedance) with the chassis taken as standard. Therefore, there may exist some errors in the voltage values, depending on the internal impedance of the DC circuit tester.

  No mark : Power ON

- Important safety notice:
  Components identified by ⚠ mark have special characteristics important for safety.
  Furthermore, special parts which have purposes of fire-retardant (resistors), high-quality sound (capacitors), low-noise (resistors), etc. are used. When replacing any of components, be sure to use only manufacturer's specified parts shown in the parts list.

- **Caution!**
  IC and LSI are sensitive to static electricity.
  Secondary trouble can be prevented by taking care during repair.
  Cover the parts boxes made of plastics with aluminum foil.
  Ground the soldering iron.
  Put a conductive mat on the work table.
  Do not touch the legs of IC or LSI with the fingers directly.

- Voltage and signal line

  ▬▶▬ : Positive voltage line

  ▪▪▶▪▪ : Negative voltage line

  ⇨ : Source signal line

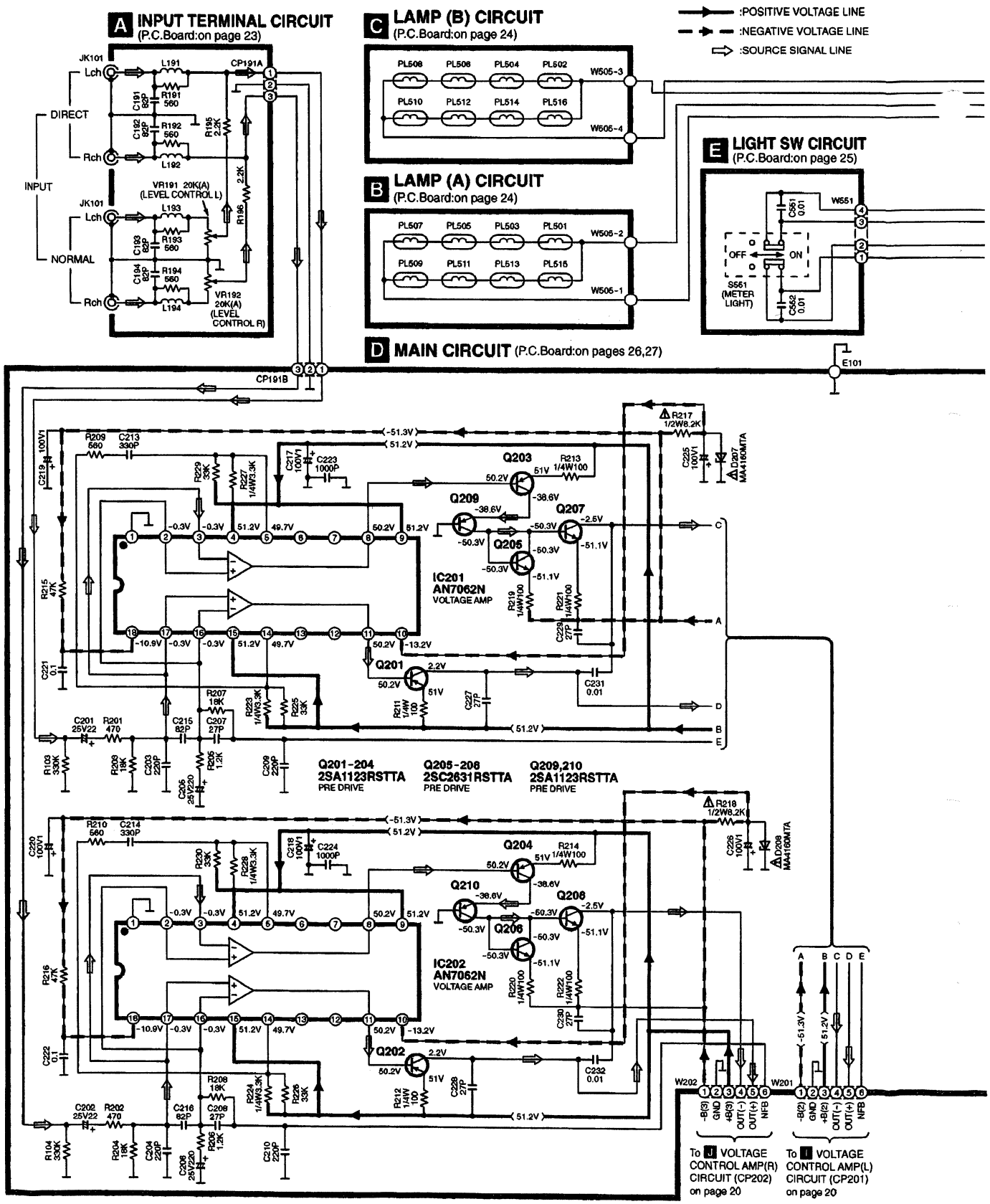
A INPUT TERMINAL CIRCUIT
(P.C.Board:on page 23)
C LAMP (B) CIRCUIT
(P.C.Board:on page 24)
:POSITIVE VOLTAGE LINE
:NEGATIVE VOLTAGE LINE
:SOURCE SIGNAL LINE
B LAMP (A) CIRCUIT
(P.C.Board:on page 24)
E LIGHT SW CIRCUIT
(P.C.Board:on page 25)
D MAIN CIRCUIT (P.C.Board:on pages 26,27)
INPUT
DIRECT
NORMAL
JK101
Lch
Rch
VR191 20K(A)
(LEVEL CONTROL L)
VR192 20K(A)
(LEVEL CONTROL R)
CP191A
CP191B
E101
W505-3
W505-4
W505-2
W505-1
W551
OFF
ON
S551
(METER LIGHT)
IC201
AN7062N
VOLTAGE AMP
IC202
AN7062N
VOLTAGE AMP
Q201-204
2SA1123RSTTA
PRE DRIVE
Q205-208
2SC2631RSTTA
PRE DRIVE
Q209,210
2SA1123RSTTA
PRE DRIVE
W202
W201
To J VOLTAGE CONTROL AMP(R) CIRCUIT (CP202) on page 20
To I VOLTAGE CONTROL AMP(L) CIRCUIT (CP201) on page 20

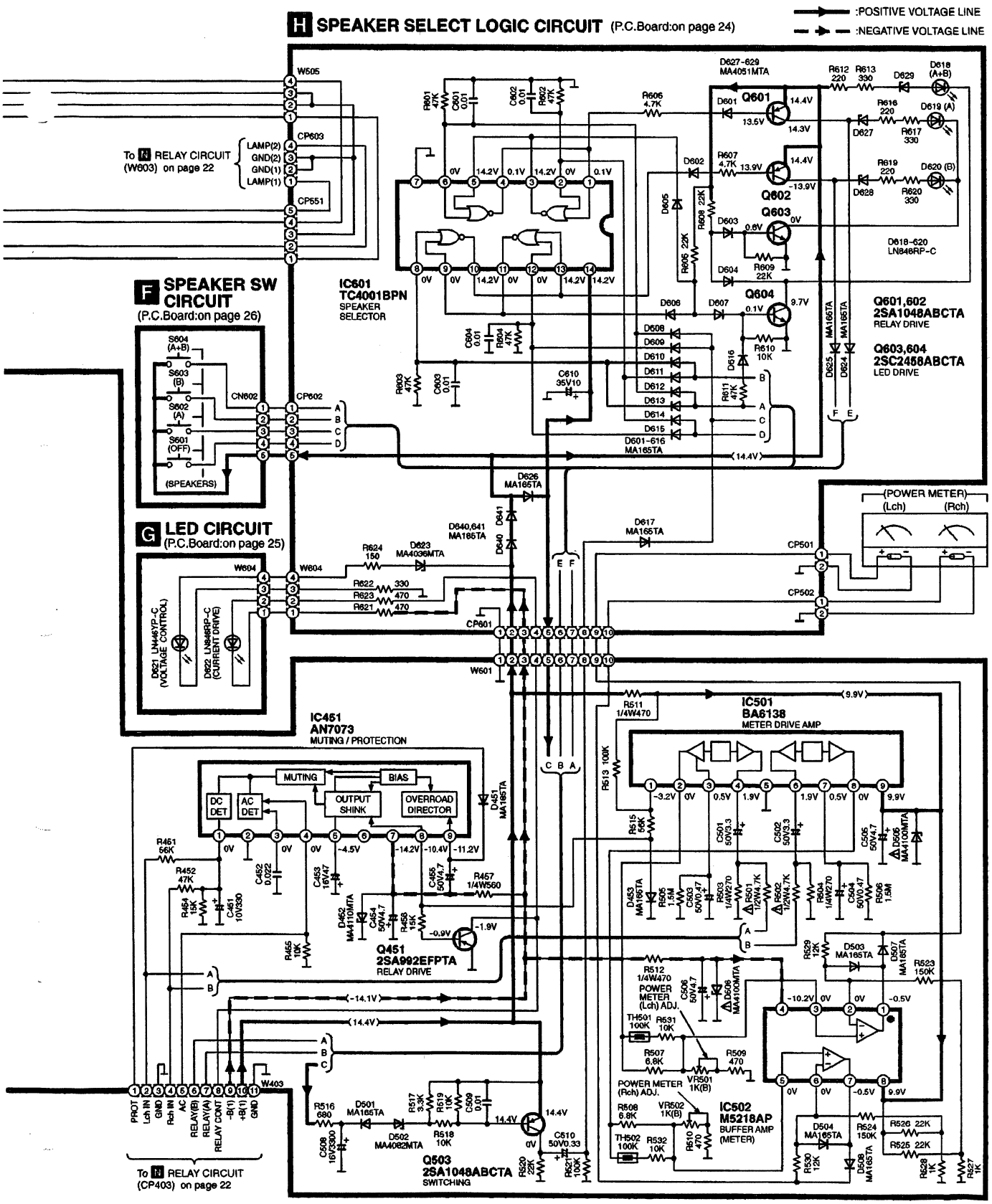
H SPEAKER SELECT LOGIC CIRCUIT (P.C.Board:on page 24)
:POSITIVE VOLTAGE LINE
:NEGATIVE VOLTAGE LINE
F SPEAKER SW CIRCUIT (P.C.Board:on page 26)
G LED CIRCUIT (P.C.Board:on page 25)
IC601 TC4001BPN SPEAKER SELECTOR
Q601,602 2SA1048ABCTA RELAY DRIVE
Q603,604 2SC2458ABCTA LED DRIVE
IC451 AN7073 MUTING / PROTECTION
IC501 BA6138 METER DRIVE AMP
IC502 M5218AP BUFFER AMP (METER)
Q451 2SA992EFPTA RELAY DRIVE
Q503 2SA1048ABCTA SWITCHING
To H RELAY CIRCUIT (W603) on page 22
To H RELAY CIRCUIT (CP403) on page 22
(POWER METER) (Lch) (Rch)
POWER METER (Lch) ADJ.
POWER METER (Rch) ADJ.
MUTING
BIAS
DC DET
AC DET
OUTPUT SHINK
OVERROAD DIRECTOR

:POSITIVE VOLTAGE LINE
:NEGATIVE VOLTAGE LINE
:SOURCE SIGNAL LINE

I VOLTAGE CONTROL AMP (L) CIRCUIT (P.C.Board:on page 25)

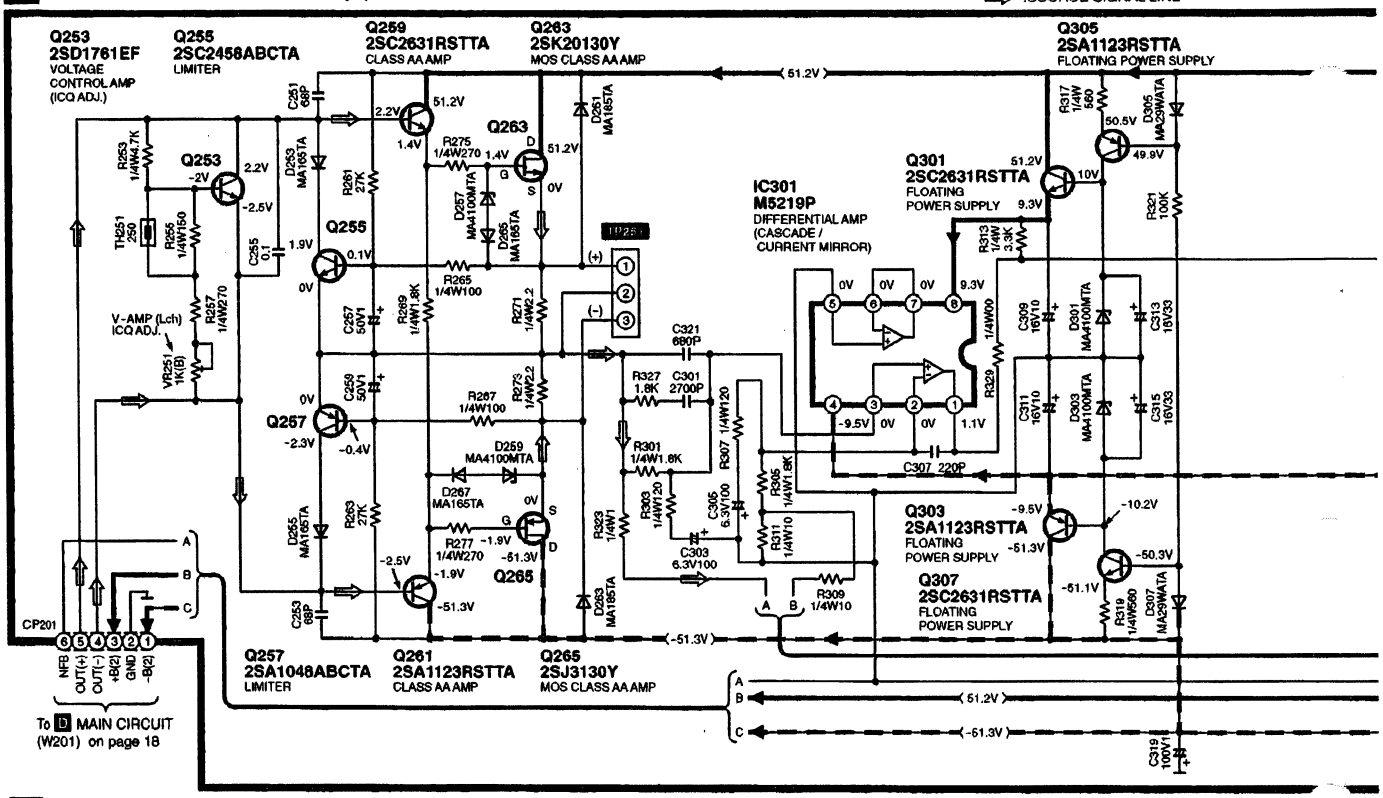

J VOLTAGE CONTROL AMP (R) CIRCUIT (P.C.Board:on page 28)

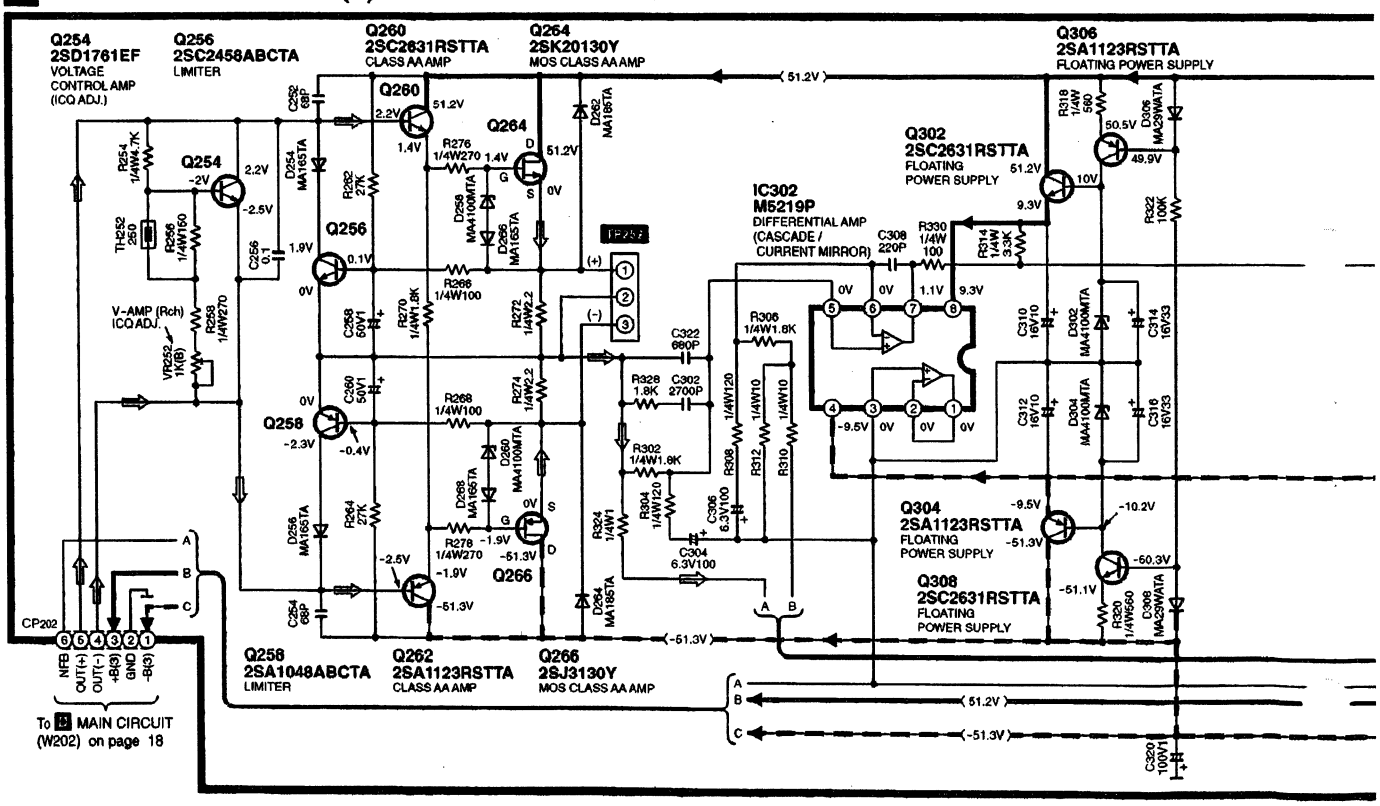

:POSITIVE VOLTAGE LINE
:NEGATIVE VOLTAGE LINE
:SOURCE SIGNAL LINE

K CURRENT DRIVE AMP (L) CIRCUIT (P.C.Board:on page 29)

M CAPACITOR CIRCUIT (P.C.Board:on page 23)

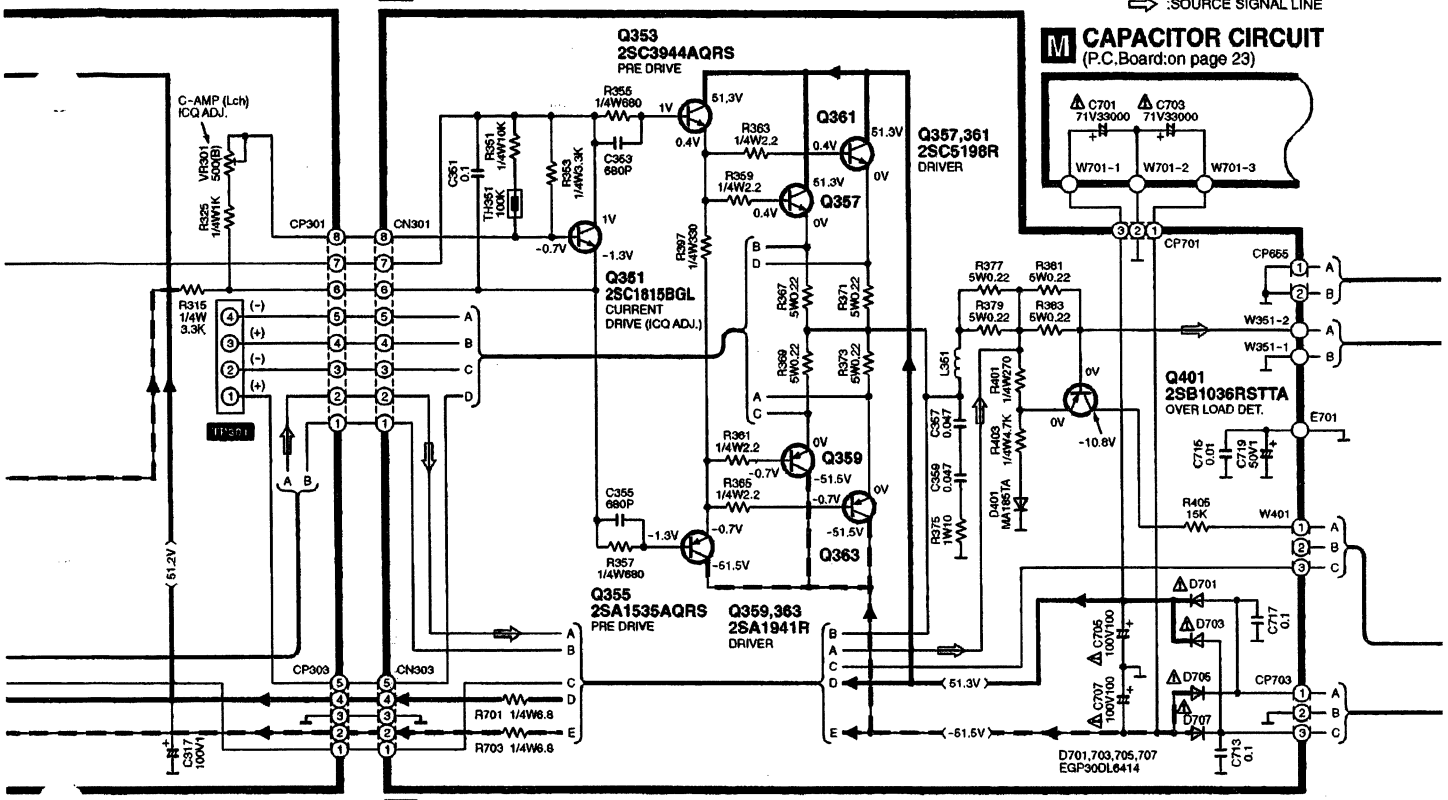

L CURRENT DRIVE AMP (R) CIRCUIT (P.C.Board:on page 29)

M CAPACITOR CIRCUIT (P.C.Board:on page 23)

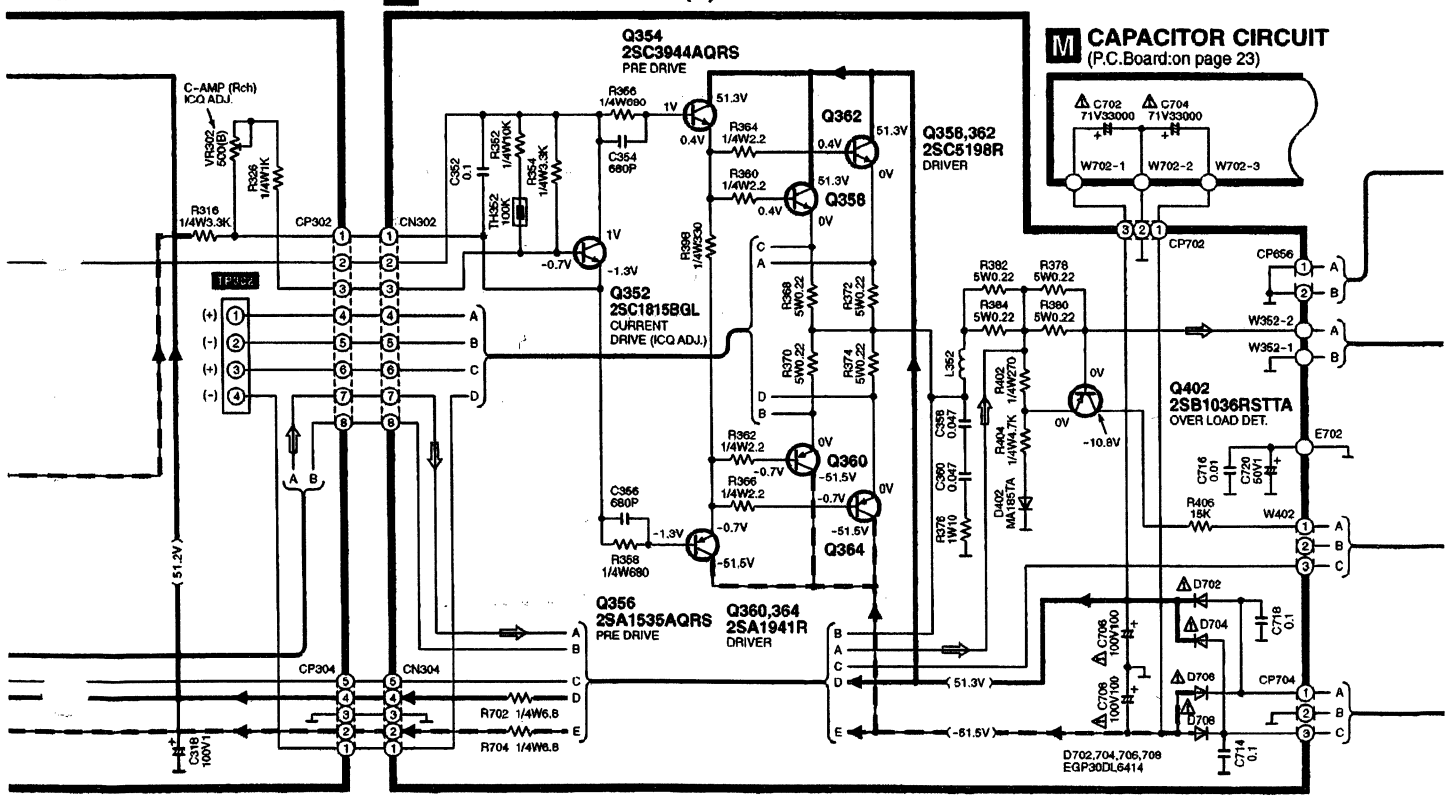

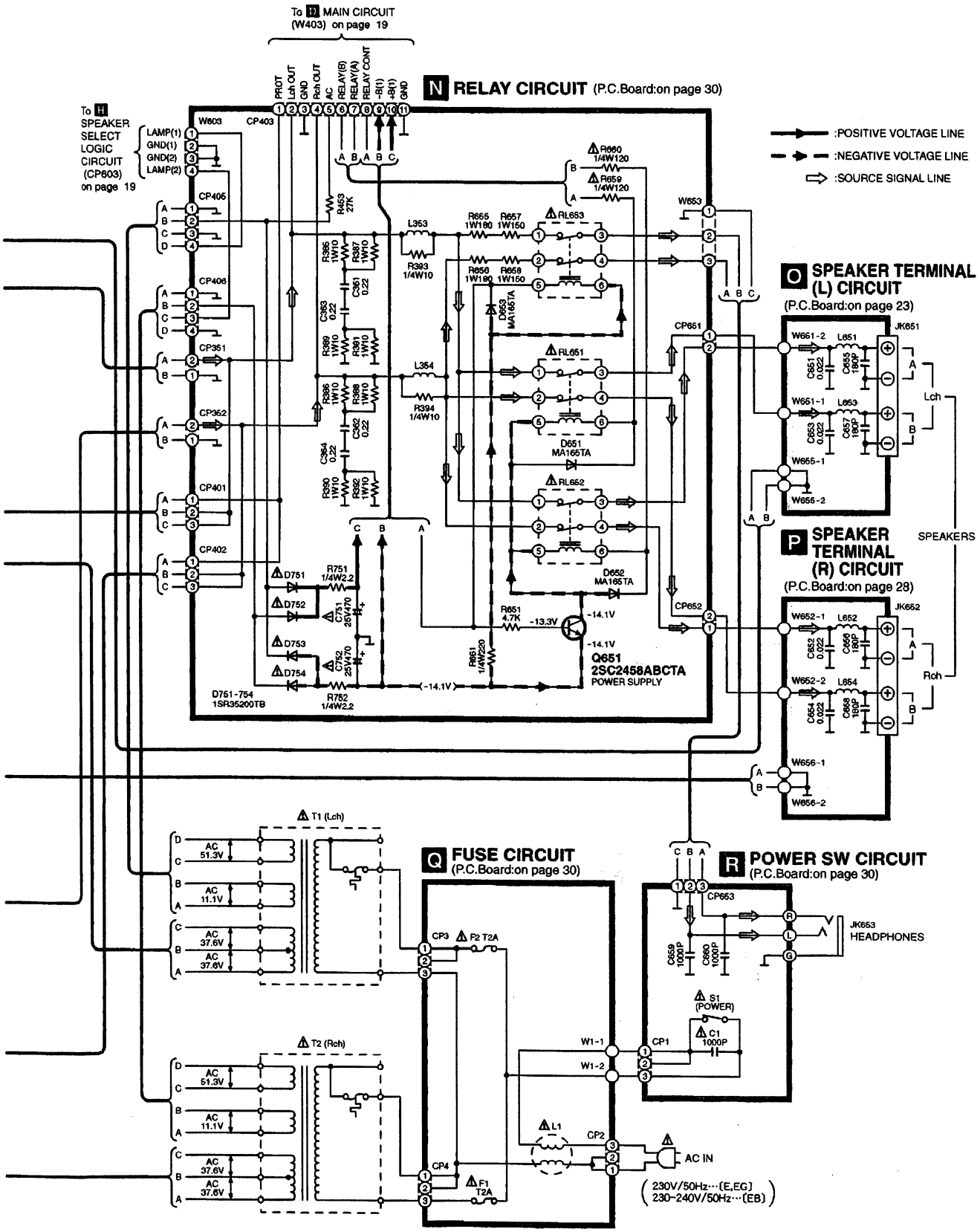
To M MAIN CIRCUIT (W403) on page 19
N RELAY CIRCUIT (P.C.Board:on page 30)
To H SPEAKER SELECT LOGIC CIRCUIT (CP603) on page 19
:POSITIVE VOLTAGE LINE
:NEGATIVE VOLTAGE LINE
:SOURCE SIGNAL LINE
O SPEAKER TERMINAL (L) CIRCUIT
(P.C.Board:on page 23)
P SPEAKER TERMINAL (R) CIRCUIT
(P.C.Board:on page 28)
SPEAKERS
Q FUSE CIRCUIT
(P.C.Board:on page 30)
R POWER SW CIRCUIT
(P.C.Board:on page 30)
Q651
2SC2458ABCTA
POWER SUPPLY
D751-754
1SR35200TB
JK653
HEADPHONES
AC IN
230V/50Hz···(E,EG)
230-240V/50Hz···(EB)

Printed Circuit Board Diagram

- This circuit board diagram may be modified at any time with the development of new technology.

O SPEAKER TERMINAL(L) P.C.B.

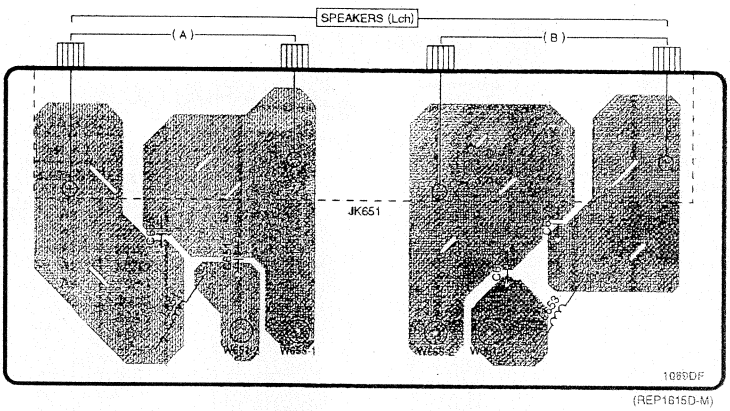

(REP1615D-M)

M CAPACITOR P.C.B.

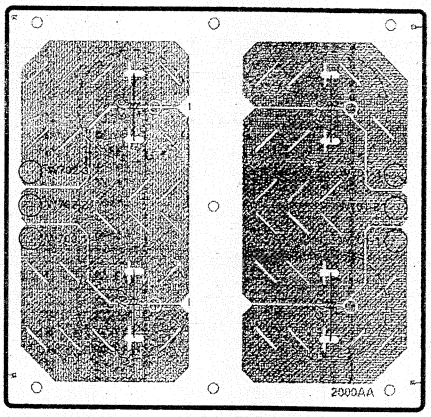

(REP2720A-P)

A INPUT TERMINAL P.C.B.

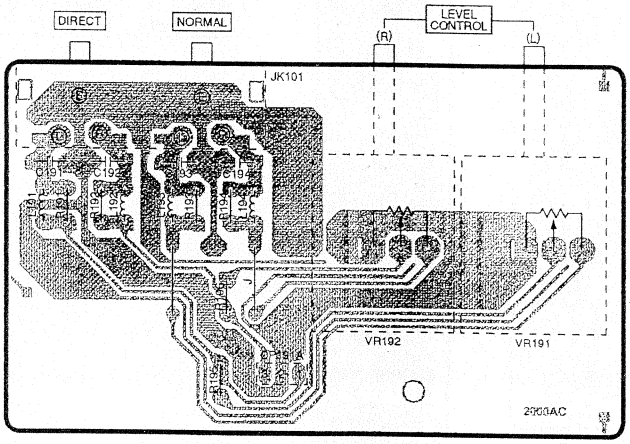

(REP2720A-P)

■ ELECTRICAL PARTS LOCATION

Ref. No.	Lo. No.	Ref. No.	Lo. No.
O SPEAKER TERMINAL(L) P.C.B.			
L651	3B	JK651	2C
L653	3D	C651	2C
W651-1	3D	C653	2D
W651-2	3C	C655	2B
W655-1	3C	C657	2D
W655-2	3D		
M CAPACITOR P.C.B.			
W701-1	5D	W702-3	5B
W701-2	5D	C701	5C
W701-3	5D	C702	5B
W702-1	5B	C703	4C
W702-2	5B	C704	4B
A INPUT TERMINAL P.C.B.			
VR191	8D	R192	7A
VR192	8C	R193	7B
L191	7A	R194	7B
L192	7B	R195	8B
L193	7B	R196	8B
L194	7B	C191	7A
CP191A	8B	C192	7B
JK101	7B	C193	7B
R191	7A	C194	7B

H SPEAKER SELECT LOGIC P.C.B.

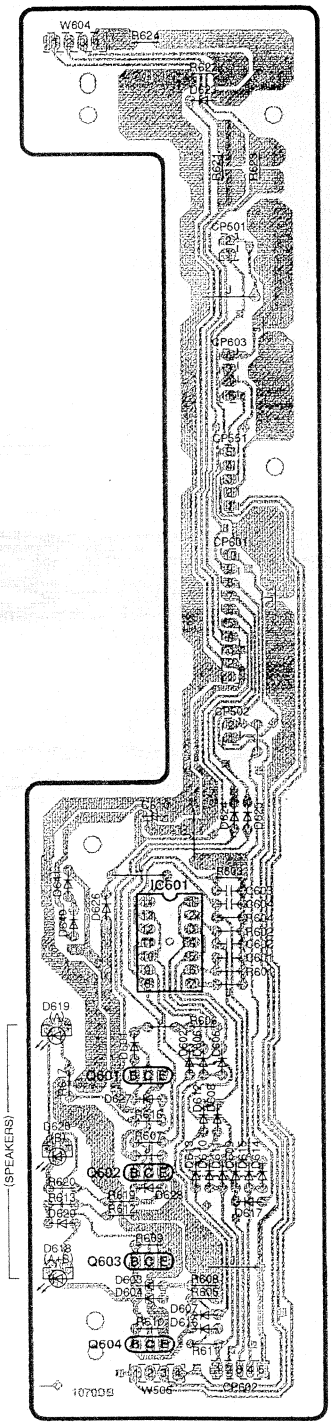

C LAMP(B) P.C.B.

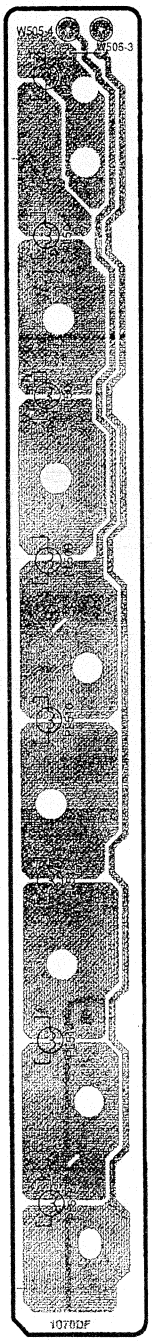

B LAMP(A) P.C.B.

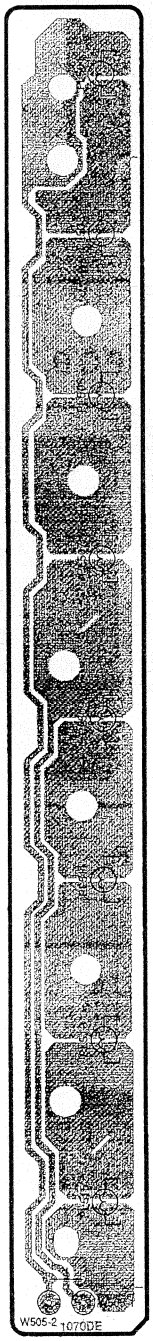

■ ELECTRICAL PARTS LOCATION

Ref. No.	Lo. No.	Ref. No.	Lo. No.
H SPEAKER SELECT LOGIC P.C.B.			
IC601	6A	CP501	2B
Q601	6A	CP502	5B
Q602	7A	CP551	3B
Q603	7A	CP601	4B
Q604	8A	CP602	8B
D601	6A	CP603	3B
D602	6B	W505	8A
D603	8A	W604	1A
D604	8A	R601	6B
D605	6B	R602	6B
D606	6B	R603	5B
D607	8B	R604	6B
D608	7B	R605	8B
D609	7B	R606	6B
D610	7B	R607	7A
D611	7B	R608	8B
D612	7B	R609	7A
D613	7B	R610	8A
D614	7B	R611	8B
D615	7B	R612	7A
D616	8B	R613	7A
D617	7B	R616	7A
D618	7A	R617	7A
D619	6A	R619	7A
D620	7A	R620	7A
D623	2B	R621	2B
D624	5B	R622	1B
D625	5B	R623	2B
D626	6A	R624	1A
D627	7A	C601	6B
D628	7A	C602	6B
D629	7A	C603	6B
D640	6A	C604	6B
D641	5A	C610	5A
C LAMP(B) P.C.B.			
PL502	2C	PL512	6C
PL504	3C	PL514	7C
PL506	3C	PL516	7C
PL508	4C	W505-3	2C
PL510	5C	W505-4	2C
B LAMP(A) P.C.B.			
PL501	2D	PL511	6D
PL503	3D	PL513	7D
PL505	4D	PL515	8D
PL507	4D	W505-1	8D
PL509	5D	W505-2	8D

G LED P.C.B.

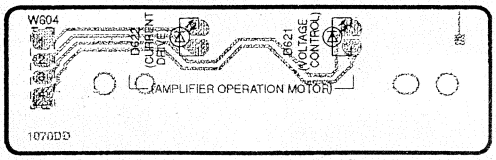

(REP1616D-S)

E LIGHT SW P.C.B.

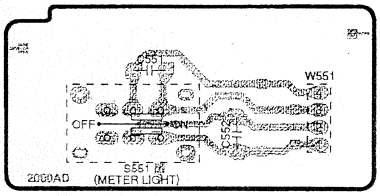

(REP2720A-P)

I VOLTAGE CONTROL AMP(L) P.C.B.

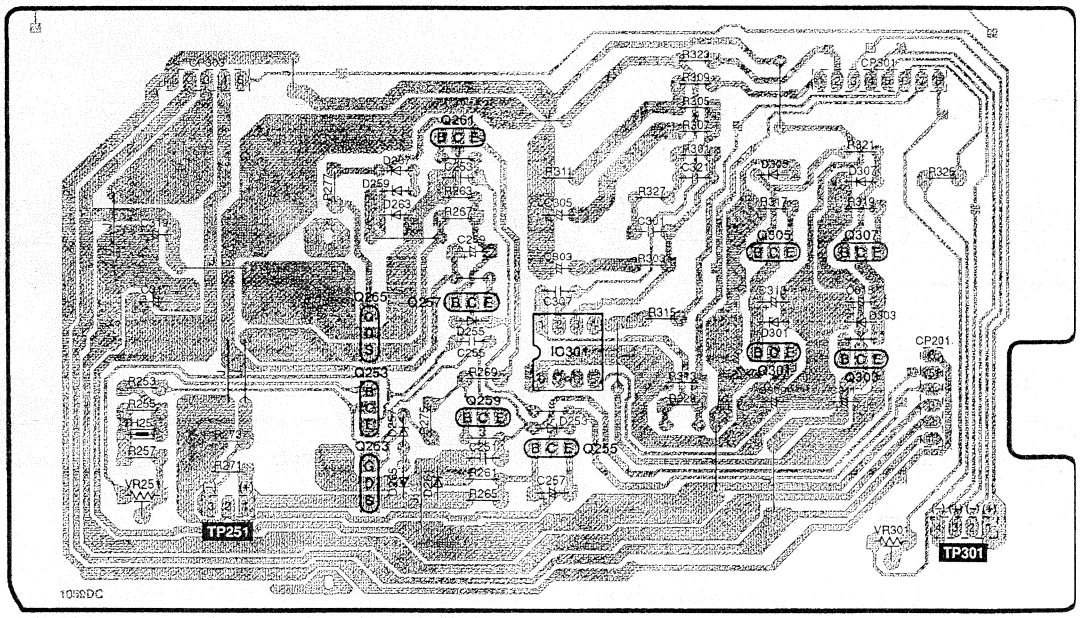

(REP1615D-M)

■ ELECTRICAL PARTS LOCATION

Ref. No.	Lo. No.	Ref. No.	Lo. No.	Ref. No.	Lo. No.	Ref. No.	Lo. No.	Ref. No.	Lo. No.	Ref. No.	Lo. No.	Ref. No.	Lo. No.
G LED P.C.B.													
D621	1C	D622	1B	W604	1A								
E LIGHT SW P.C.B.													
S551	2E	W551	2F	C551	2E	C552	2E						
I VOLTAGE CONTROL AMP(L) P.C.B.													
IC301	5D	Q307	4E	D305	4E	R255	5B	R301	4D	R323	3D	C305	4D
Q253	5C	D253	5D	D307	4E	R257	5B	R303	4D	R325	4F	C307	4D
Q255	5D	D255	5C	VR251	5B	R261	5C	R305	3D	R327	4D	C309	5E
Q257	4C	D257	5C	VR301	6E	R263	4C	R307	4D	R329	5D	C311	5E
Q259	5C	D259	4C	TH251	5B	R265	5C	R309	3D	C251	5C	C313	4E
Q261	4C	D261	5C	CP201	5F	R267	4C	R311	4D	C253	4C	C315	4E
Q263	5C	D263	4C	CP301	3E	R269	5C	R313	5D	C255	5C	C317	4B
Q265	5C	D265	5C	CP303	3B	R271	5B	R315	5D	C257	5D	C319	4B
Q301	5E	D267	4C	TP251	5B	R273	5B	R317	4E	C259	4C	C321	4D
Q303	5E	D301	5E	TP301	6F	R275	5C	R319	4E	C301	4D		
Q305	4E	D303	5E	R253	5B	R277	4C	R321	4E	C303	4D		

D MAIN P.C.B.

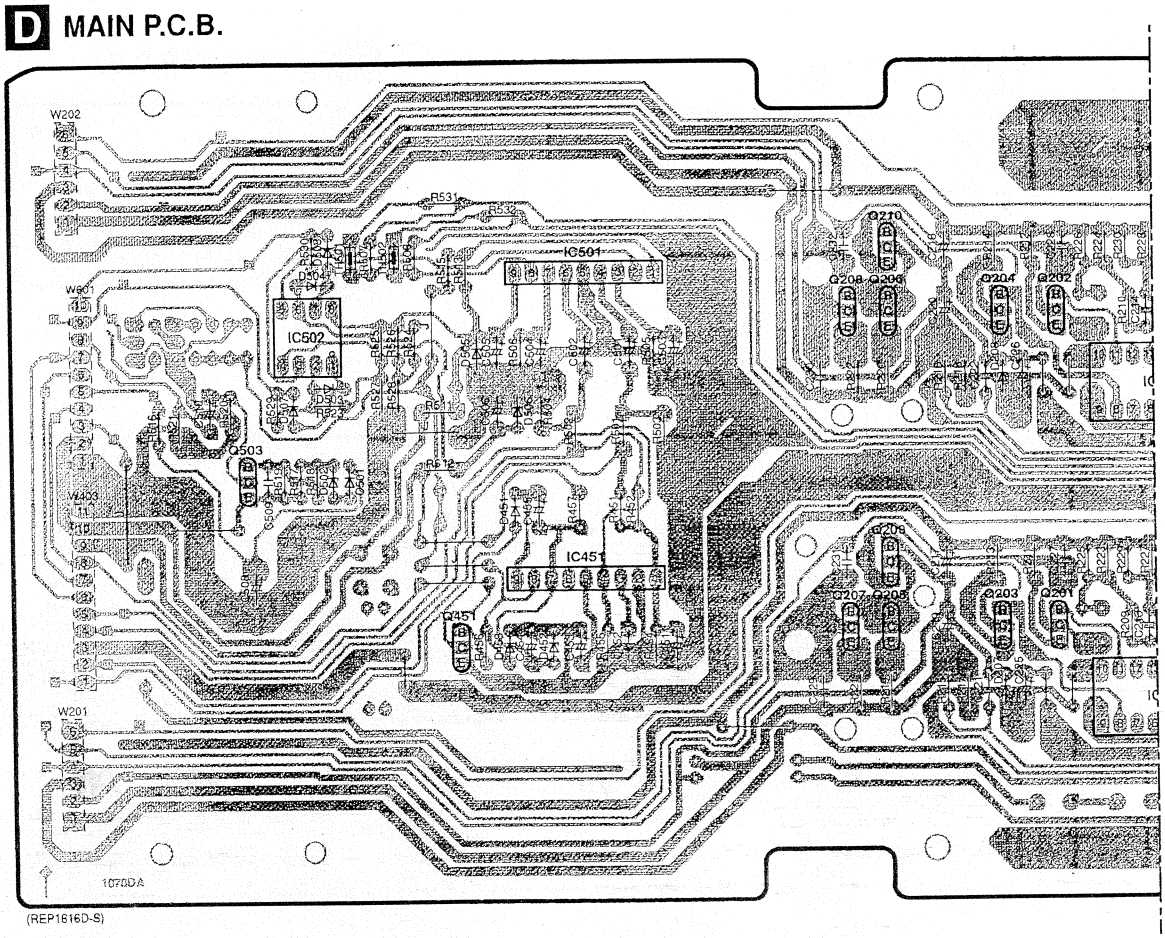

(REP1616D-S)

F SPEAKER SW P.C.B.

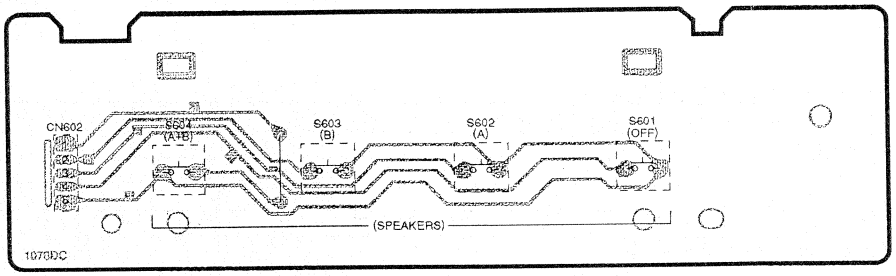

(REP1616D-S)

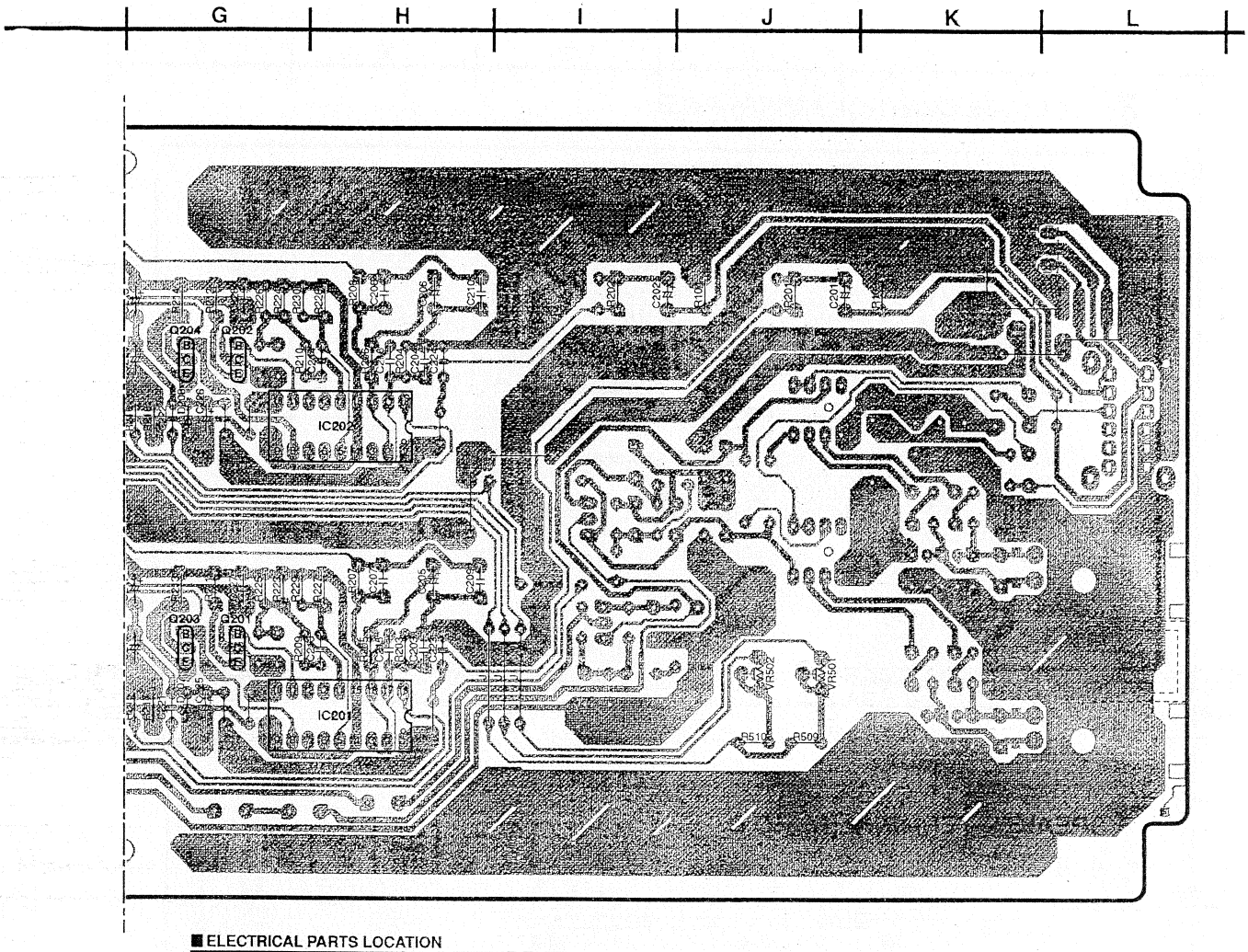

■ ELECTRICAL PARTS LOCATION

Ref. No.	Lo. No.	Ref. No.	Lo. No.	Ref. No.	Lo. No.	Ref. No.	Lo. No.	Ref. No.	Lo. No.	Ref. No.	Lo. No.	Ref. No.	Lo. No.
D MAIN P.C.B.													
IC201	4G	D501	3B	R203	4H	R225	4F	R511	3C	C203	4H	C227	4F
IC202	2G	D502	3B	R204	2H	R226	2F	R512	3C	C204	2H	C228	2F
IC451	4D	D503	3B	R205	4H	R227	4G	R513	2C	C205	4H	C229	4E
IC501	2D	D504	2B	R206	2H	R228	2H	R515	2C	C206	2H	C230	3E
IC502	2B	D505	3C	R207	4H	R229	4G	R516	3A	C207	4H	C231	4E
Q201	4F	D506	3C	R208	2H	R230	2G	R517	3B	C208	2H	C232	2E
Q202	2F	D507	3B	R209	4G	R451	3D	R518	3B	C209	4H	C451	4D
Q203	4F	D508	2B	R210	2G	R452	3D	R519	3B	C210	2H	C452	4D
Q204	2F	VR501	4J	R211	4F	R454	4D	R520	3B	C213	4G	C453	4D
Q205	4E	VR502	4J	R212	2F	R455	4D	R521	3B	C214	2H	C454	4D
Q206	2E	TH501	2B	R213	4F	R456	4C	R523	3B	C215	4H	C455	3C
Q207	4E	TH502	2C	R214	2F	R457	3D	R524	2C	C216	2H	C501	3D
Q208	2E	CP191B	2L	R215	4E	R501	3D	R525	2C	C217	4E	C502	3D
Q209	4E	W201	4A	R216	3E	R502	3D	R526	2C	C218	2E	C503	3D
Q210	2E	W202	1A	R217	4F	R503	3D	R527	3C	C219	4E	C504	3D
Q451	4C	W403	3A	R218	3F	R504	3C	R528	3C	C220	2E	C505	3C
Q503	3B	W601	2A	R219	4E	R505	3D	R529	3B	C221	4F	C506	3C
D207	4F	E101	4L	R220	3E	R506	3C	R530	2B	C222	3F	C508	4B
D208	3F	R103	2K	R221	4E	R507	2C	R531	2C	C223	4H	C509	3B
D451	3C	R104	2J	R222	3E	R508	2C	R532	2C	C224	2H	C510	3B
D452	4C	R201	2J	R223	4G	R509	4J	C201	2J	C225	4F		
D453	4C	R202	2I	R224	2G	R510	4J	C202	2I	C226	3F		
F SEAKER SW P.C.B.													
S601	7D	S602	7D	S603	7C	S604	7B	CN602	7B				

J VOLTAGE CONTROL AMP(R) P.C.B.

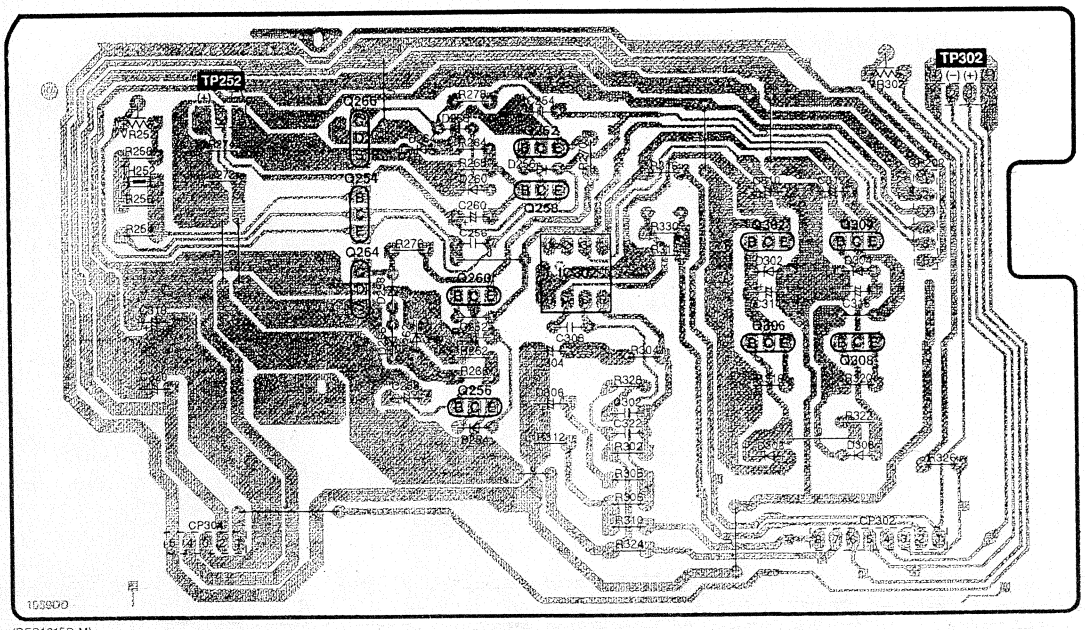

(REP1615D-M)

P SPEAKER TERMINAL(R) P.C.B.

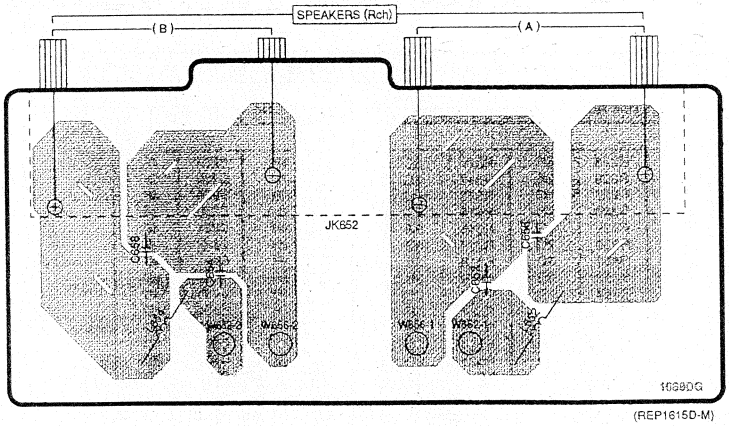

(REP1615D-M)

■ ELECTRICAL PARTS LOCATION

Ref. No.	Lo. No.	Ref. No.	Lo. No.
J VOLTAGE CONTROL AMP(R) P.C.B.			
IC302	2D	R268	2C
Q254	2C	R270	2D
Q256	3C	R272	2B
Q258	2D	R274	2B
Q260	2C	R276	2C
Q262	2D	R278	1C
Q264	2C	R302	3D
Q266	2C	R304	3D
Q302	2E	R306	3D
Q304	2E	R308	3D
Q306	3E	R310	4D
Q308	3E	R312	3D
D254	3C	R314	2D
D256	2D	R316	2D
D258	2C	R318	3E
D260	2C	R320	3E
D262	3C	R322	3E
D264	2C	R324	4D
D266	3C	R326	3F
D268	2C	R328	3D
D302	2E	R330	2D
D304	2E	C252	3C
D306	3E	C254	1D
D308	3E	C256	2C
VR252	2B	C258	3C
VR302	1E	C260	2C
TH252	2B	C302	3D
CP202	2E	C304	3D
CP302	4E	C306	3D
CP304	4B	C308	3D
TP252	1B	C310	2E
TP302	1F	C312	2E
R254	2B	C314	2E
R256	2B	C316	2E
R258	2B	C318	3B
R262	3C	C320	3B
R264	2C	C322	3D
R266	3C		
P SPEAKER TERMINAL(R) P.C.B.			
L652	7D	JK652	6C
L654	7B	C652	7C
W652-1	7C	C654	6B
W652-2	7B	C656	6D
W656-1	7C	C658	6B
W656-2	7B		

K CURRENT DRIVE AMP(L) P.C.B.

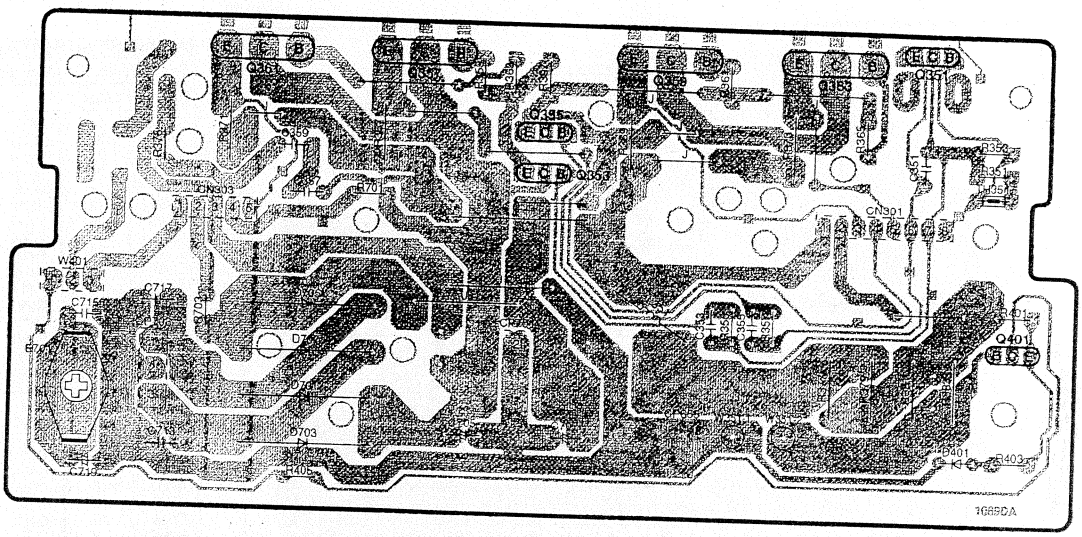

(REP1615D-M)

L CURRENT DRIVE AMP(R) P.C.B.

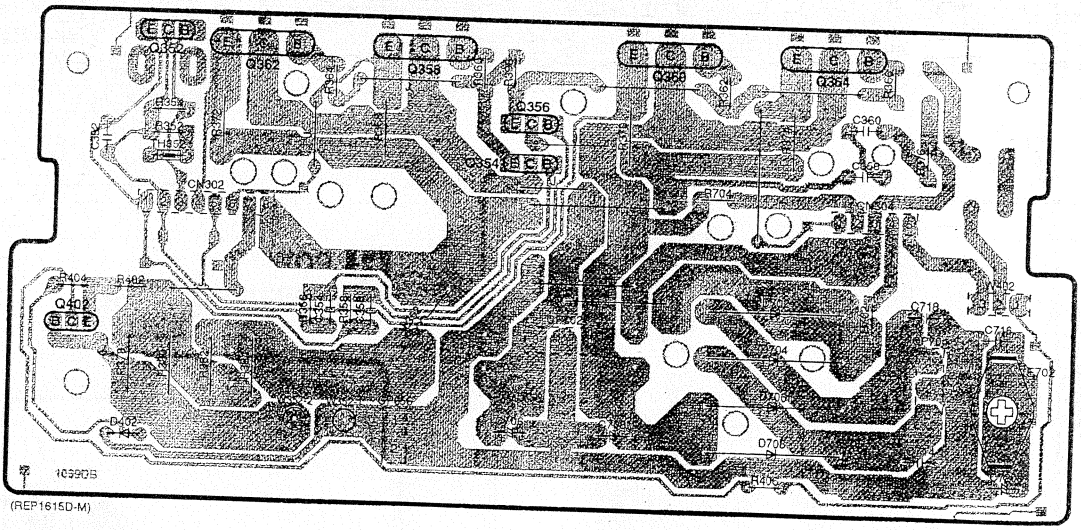

(REP1615D-M)

■ ELECTRICAL PARTS LOCATION

Ref. No.	Lo. No.	Ref. No.	Lo. No.	Ref. No.	Lo. No.	Ref. No.	Lo. No.	Ref. No.	Lo. No.	Ref. No.	Lo. No.	Ref. No.	Lo. No.	Ref. No.	Lo. No.	Ref. No.	Lo. No.
K CURRENT DRIVE AMP(L) P.C.B.																	
Q351	1F	Q401	3F	L351	3D	W351-2	3E	R359	1C	R373	2E	R401	3F	C355	3E	C717	3B
Q353	2D	D401	3F	CN301	2E	W401	3A	R361	1E	R375	2B	R403	3F	C357	2B	C719	3A
Q355	2D	D701	3B	CN303	2B	E701	3A	R363	1C	R377	3E	R405	3B	C359	2B		
Q357	1C	D703	3B	CP655	3D	R351	2F	R365	2E	R379	3E	R701	2C	C705	3C		
Q359	1D	D705	3B	CP701	3C	R353	2F	R367	2C	R381	3E	R703	3B	C707	3D		
Q361	1B	D707	3B	CP703	3B	R355	3E	R369	2D	R383	3F	C351	2E	C713	3B		
Q363	1E	TH351	2F	W351-1	3E	R357	3E	R371	2B	R397	1D	C353	3D	C715	3A		
L CURRENT DRIVE AMP(R) P.C.B.																	
Q352	4B	Q402	6A	L352	6C	W352-2	6B	R360	4C	R374	5E	R402	6A	C356	6C	C718	6F
Q354	5C	D402	6A	CN302	5B	W402	6F	R362	5D	R376	5E	R404	6A	C358	5E	C720	7F
Q356	5C	D702	6E	CN304	5E	E702	6F	R364	5B	R378	6A	R406	7E	C360	5E		
Q358	4C	D704	6E	CP656	6C	R352	5B	R366	4E	R380	6B	R702	6E	C706	6C		
Q360	4D	D706	6E	CP702	6D	R354	5B	R368	5C	R382	6B	R704	5D	C708	6D		
Q362	4B	D708	6E	CP704	6F	R356	6B	R370	5D	R384	6B	C352	5A	C714	6F		
Q364	4E	TH352	5B	W352-1	6C	R358	6C	R372	5B	R398	4C	C354	6B	C716	6F		

N RELAY P.C.B.

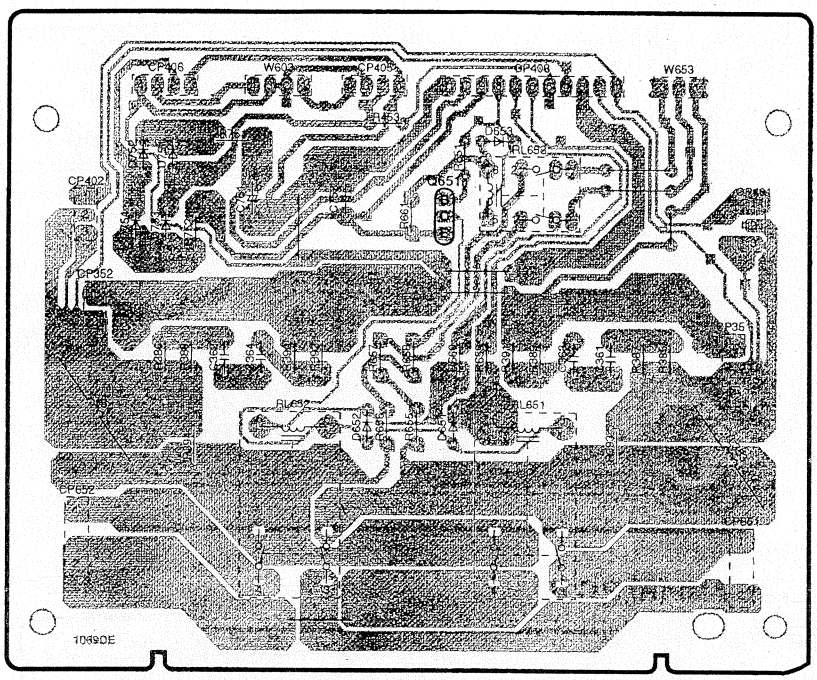

(REP1615D-M)

■ ELECTRICAL PARTS LOCATION

Ref. No.	Lo. No.	Ref. No.	Lo. No.
N RELAY P.C.B.			
Q651	2C	R387	3D
D651	3C	R388	3B
D652	3C	R389	3D
D653	2C	R390	3B
D751	2B	R391	3C
D752	2A	R392	3B
D753	2B	R393	3D
D754	2A	R394	3B
L353	3D	R453	2C
L354	3A	R651	2C
RL651	3C	R655	3C
RL652	3B	R656	3C
RL653	2C	R657	3C
CP351	3E	R658	3C
CP352	3A	R659	3C
CP401	2E	R660	3C
CP402	2A	R661	2C
CP403	1C	R751	2B
CP405	1C	R752	2B
CP406	1B	C361	3D
CP651	4E	C362	3B
CP652	4A	C363	3D
W603	1B	C364	3B
W653	1D	C751	2B
R385	3D	C752	2C
R386	3B		
Q FUSE P.C.B.			
L1	6B	W1-1	7B
F1	7B	W1-2	7B
F2	7C	FC1	7B
CP2	6B	FC2	7C
CP3	5C	FC3	7B
CP4	5B	FC4	7C
R POWER SW P.C.B.			
S1	7E	C1	7E
CP1	7E	C659	7F
CP653	7F	C660	7F
JK653	6F		

Q FUSE P.C.B.

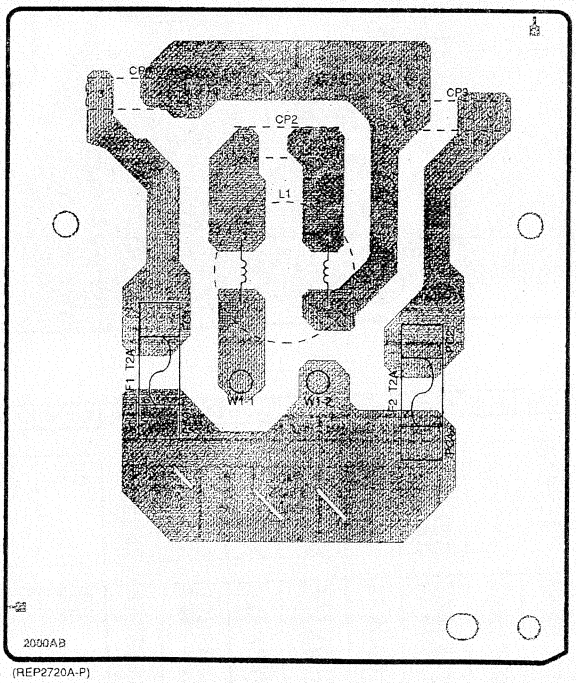

(REP2720A-P)

R POWER SW P.C.B.

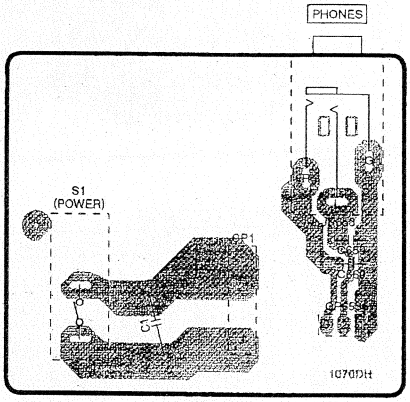

(REP1616D-S)

■ Type Illustration of IC's, Transistors and Diodes

AN7062N 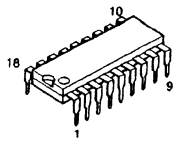	BA6138 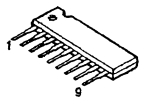	M5218AP 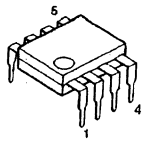	TC4001BPN 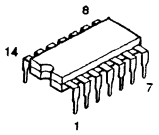	M5219P 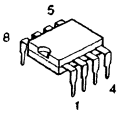	AN7073 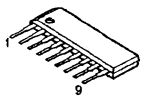
2J3130Y 2SK20130Y 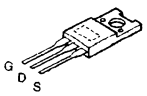	2SA1941R 2SC5198R 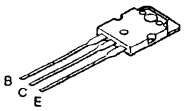	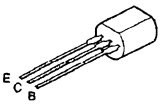 2SA992EFPTA 2SA1123RSTTA 2SC1815BGL 2SC2631RSTTA		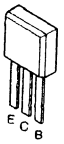 2SA1048ABCTA 2SB1036RSTTA 2SC2458ABCTA	
2SA1535AQRS 2SC3944AQRS 2SD1761EF 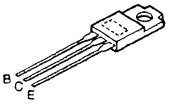	EGP30DL6414 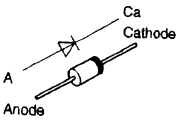	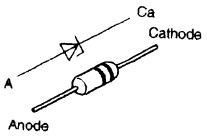 MA4100MTA MA4110MTA MA4160MTA		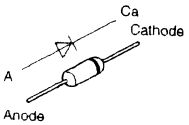 MA165TA MA29WATA 1SR35200TB	
MA185TA 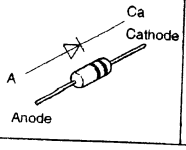	LN446YP-C LN846RP-C 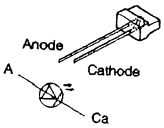	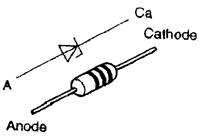 MA4036MTA MA4051MTA MA4082MTA			

■ Wiring Connection Diagram

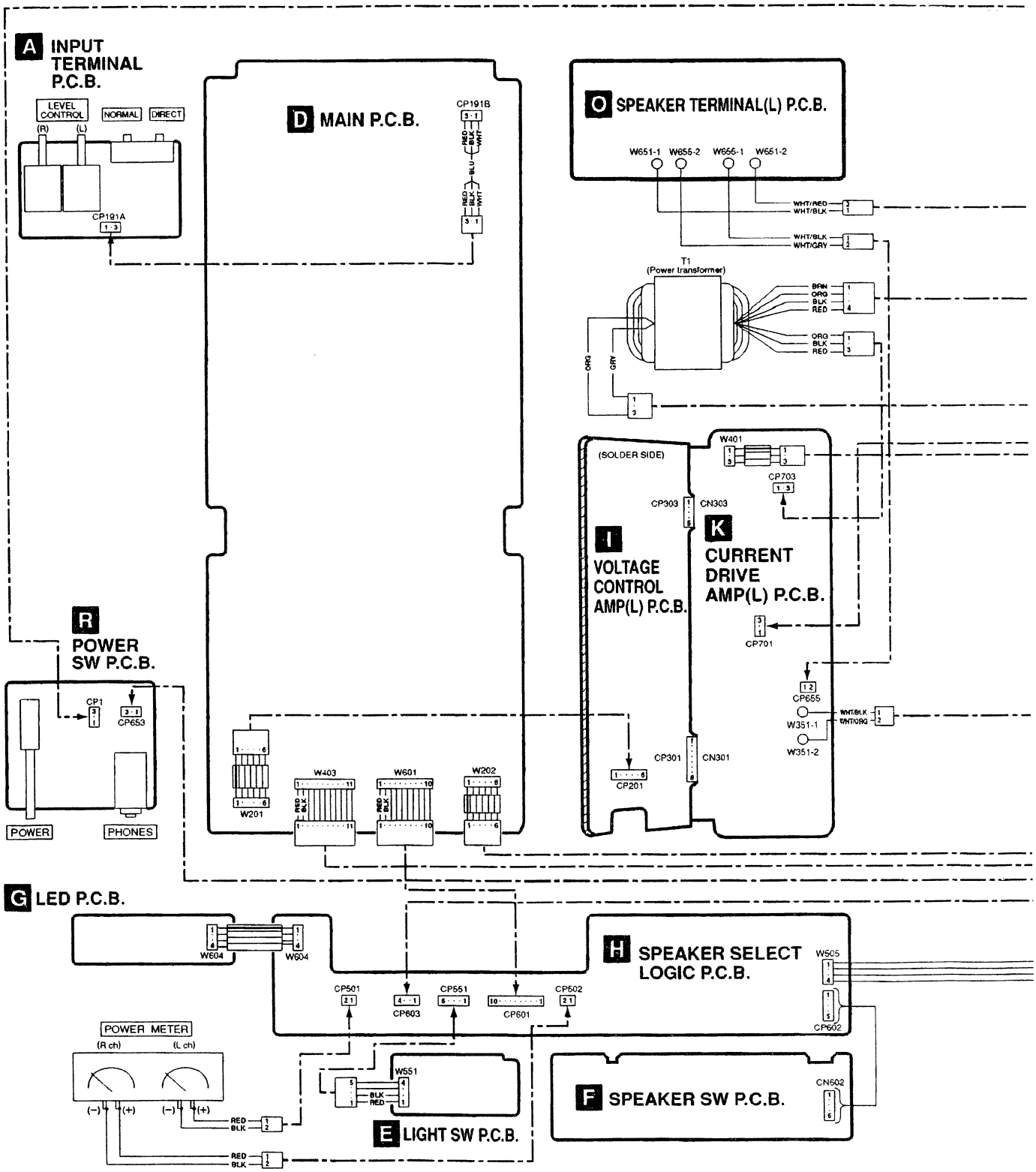

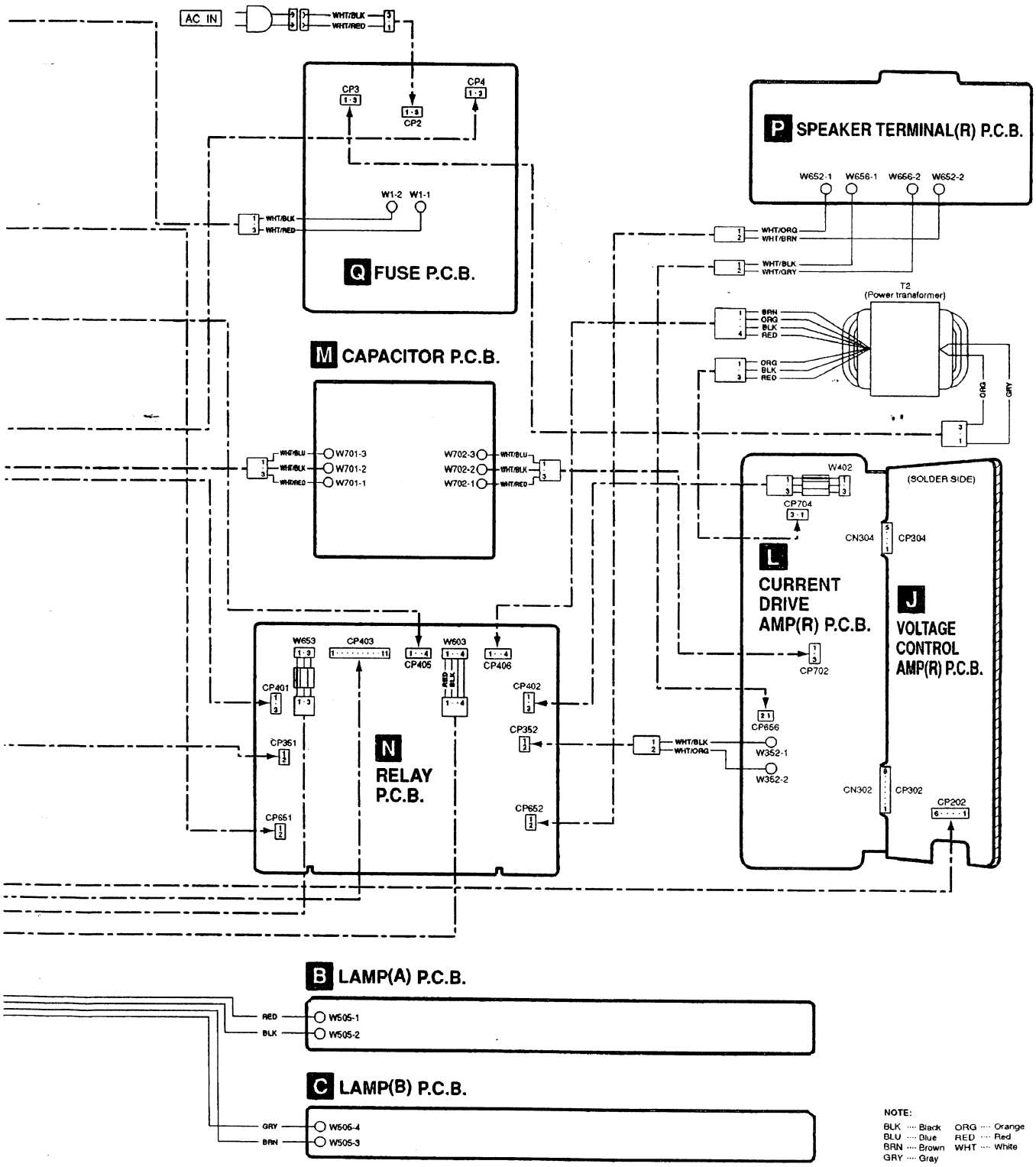

NOTE:

BLK ···· Black ORG ···· Orange
BLU ···· Blue RED ···· Red
BRN ···· Brown WHT ···· White
GRY ···· Gray

■ Block Diagram

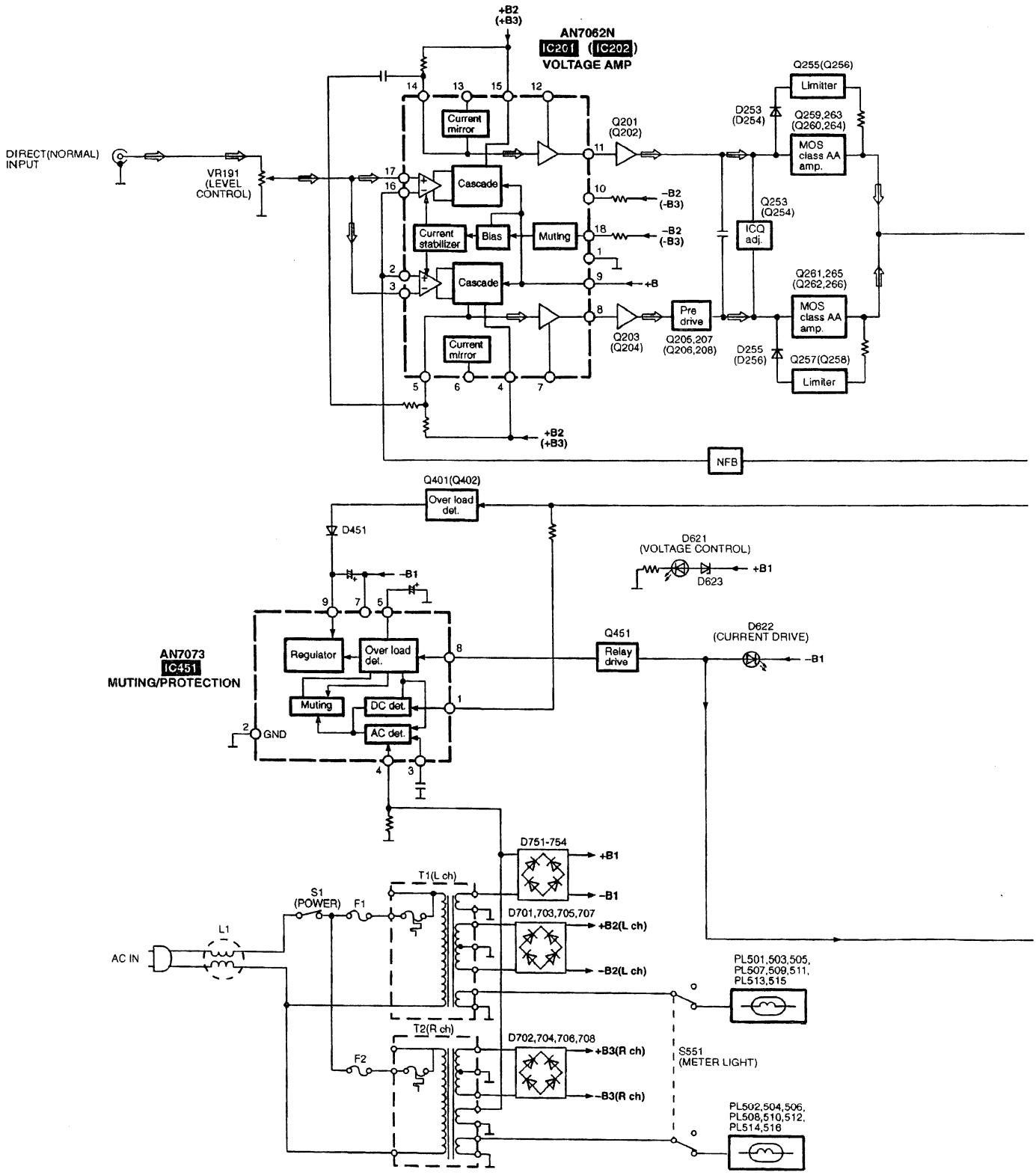

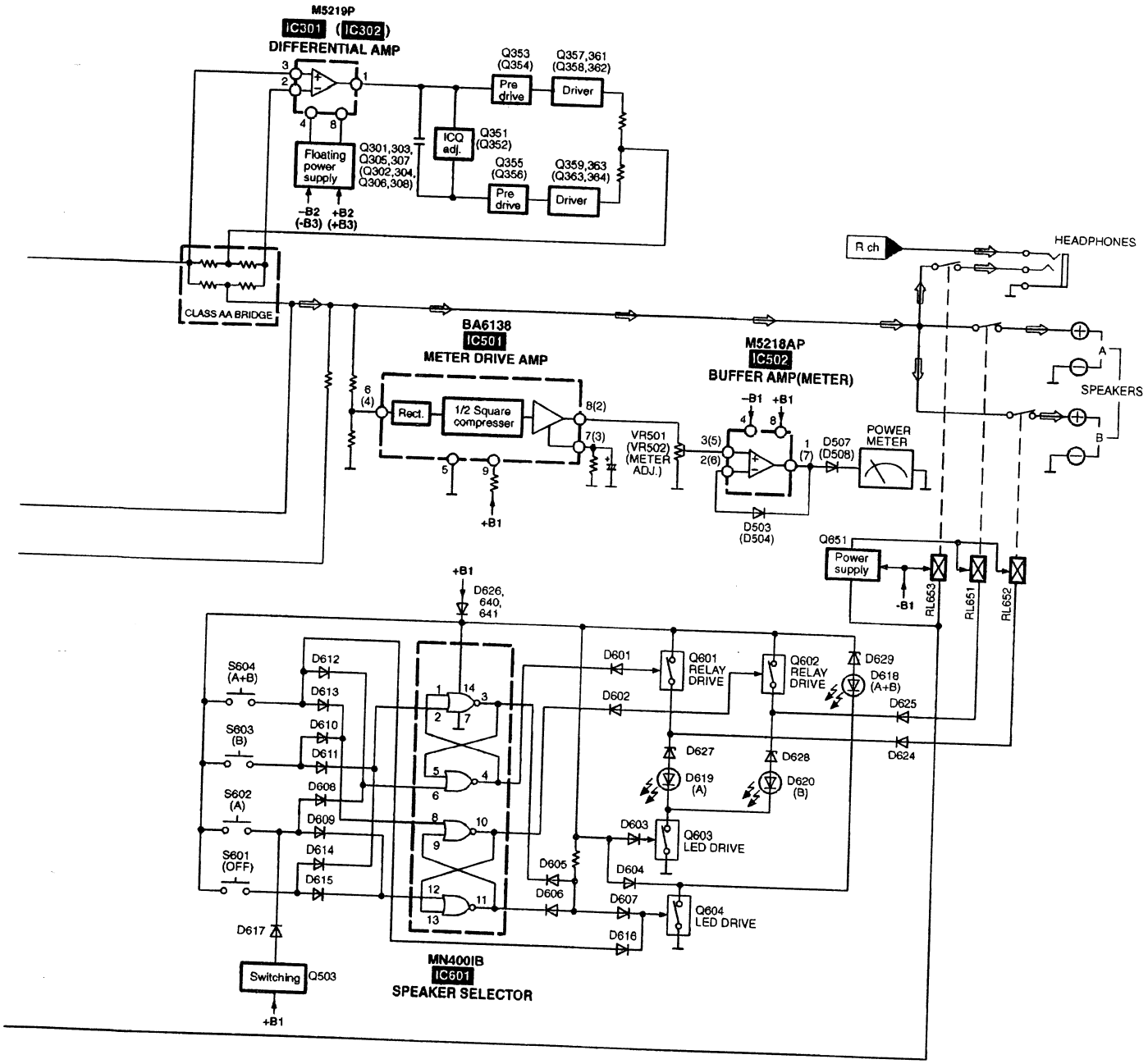

Notes

- Signal line ⇨ : Source signal
- ( ) indicates pin No. Right channel.

■ Replacement Parts List

Notes: * Important safety notice:
Components identified by ⚠ mark have special characteristics important for safety.
Furthermore, special parts which have purposes of fire-retardant (resistors), high-quality sound (capacitors), low-noise (resistors), etc. are used.
When replacing any of components, be sure to use only manufacture's specified parts shown in the parts list.
* All parts are supplied by MESA.
* The "<IA> <IB> <IC>" marks in Remarks indicate language of operating instructions.
<IA> : English, Spanish, French
<IB> : German, Italian, French
<IC> : Dutch, Danish

Ref.No.	Part No.	Part Name & Description	Pcs	Remarks
1	RGK0397-N	CABINET	2	
2	RGK0558-M	SIDE PANEL(L)	1	
3	RGK0559-M	SIDE PANEL(R)	1	
4	RHD30034	SCREW	8	
5	RKM0226-N	CABINET	1	
6	SNE2095-4	SCREW	4	
7	SNE2129-2	SCREW	3	
8	XTBS3+8JFB1	SCREW	60	
9	RKA0035	FOOT	4	
10	RGR0272E-A	REAR PANEL	1	
11	RMA0250A	ANGLE(L)	1	
12	RMA0251A	ANGLE(R)	1	
13	RSE0003	METER	1	
14	RYP0870-N	FRONT PANEL ASS'Y	1	
14-1	RGK0557-T	TRANSPARENT GLASS	1	
14-2	RGU0512C-N	BUTTON,SP	1	
14-3	RGU0890-N	BUTTON,POWER	1	
14-4	RHD30042-2	SCREW	4	
14-5	RMG0306-K	BUSH	4	
15	XTBS26+8J	SCREW	16	
16	XTWS3+8T	SCREW	1	
17	XWG3	WASHER	4	
18	SHR415	LATCH	2	
19	XTB3+8JFZ	SCREW	16	
20	SKYD4	WASHER	4	
21	SNE2117-1	SCREW	16	
22	XYN3+F8	SCREW	1	
23	XWE6FZ	WASHER	8	
24	XTB3+20JFZ	SCREW	1	
25	REZ0582-1	WIRE KIT	1	
26	REZ1130	WIRE KIT	1	
27	XYN26+C4	SCREW	2	
28	REZ0584	WIRE KIT	1	
29	REZ0585-2	WIRE KIT	1	
31	REZ1129	WIRE KIT	1	
32	REZ0586-1	WIRE KIT	1	
33	REZ1128	WIRE KIT	1	
34	REZ1138	WIRE KIT	1	
35	RHW85001	WASHER	8	
36	RMG0350-K	GUM	8	
⚠ 37	RJS2A6702	AC INLET	1	
38	RMX0086	SPACER	4	
39	SNE2095-5	SCREW	2	
40	RGW0205-S	KNOB,LEVEL CON.	2	
41	RHN90001	NUT	1	
42	RMG0321-K	BUM,TRANSFORMER	1	
43	RQLA0203	SEAL,TRANSFORMER	2	
44	SDU35-1	FILTER	1	
45	XTB4+10FFZ	SCREW	8	
46	XTB4+20FFZ	SCREW	4	
47	XTB4+8FFB	SCREW	16	
A1	RQT4617-E	INSTRUCTION MANUAL	1	(E)(EB)<IA>
A1	RQT4619-D	INSTRUCTION MANUAL	1	(EG)<IB>
A1	RQT4620-H	INSTRUCTION MANUAL	1	(EG)<IC>
⚠ A2	RJA0062-K	AC POWER SUPPLY CORD	1	(E)(EG)
	RJA0063-K	AC POWER SUPPLY CORD	1	(EB)
	RQCB0169	SERVICENTER LIST	1	
	RQA0117	WARRANTY CARD	1	

Ref.No.	Part No.	Part Name & Description	Pcs	Remarks
⚠ C1	ECKWRS102MBC	250V 1000P	1	
C191-94	ECCR1H820JC5	50V 82P	4	
C201,02	ECA1EPXS220B	25V 22U	2	
C203,04	ECKT1H221KB	500V 220P	2	
C205,06	ECA1EPX221B	25V 220U	2	
C207,08	ECCR2H270K5	500V 27P	2	
C209,10	ECKR2H221KB5	500V 220P	2	
C213,14	ECBT1H331KB5	50V 330P	2	
C215,16	ECBT1H820KB5	50V 82P	2	
C217-20	ECA2APXS010B	100V 1U	4	
C221,22	ECBT1H104ZF5	50V 0.1U	2	
C223,24	ECBT1H102KB5	50V 1000P	2	
C225,26	ECA2APXS010B	100V 1U	2	
C227-30	ECCR2H270K5	500V 27P	4	
C231,32	ECHR1H103JZ3	50V 0.01U	2	
C251-54	ECCV2H680K	500V 68P	4	
C255,56	ECBT1H104ZF5	50V 0.1U	2	
C257-60	ECA1HPXS010B	50V 1U	4	
C301,02	ECQB1H272JF3	50V 2700P	2	
C303-06	ECA0JPXS101	6.3V 100U	4	
C307,08	ECBT1H221KB5	50V 220P	2	
C309-12	ECA1CPXS100B	16V 10U	4	
C313-16	ECA1CPXS330B	16V 33U	4	
C317-20	ECA2APXS010B	100V 1U	4	
C321,22	ECBA1H681KB5	50V 680P	2	
C351,52	ECBT1H104ZF5	50V 0.1U	2	
C353-56	ECBA1H681KB5	50V 680P	4	
C357-60	ECQV1H473JM3	50V 0.047U	4	
C361-64	ECQV1H224JM3	50V 0.22U	4	
C451	ECA1AAM331B	10V 330U	1	
C452	ECQV1H223JZ3	50V 0.022U	1	
C453	ECA1CPXS470B	16V 47U	1	
C454,55	ECA1HPXS4R7B	50V 4.7U	2	
C501,02	ECA1HBX3R3B	50V 3.3U	2	
C503,04	ECA1HPXSR47B	50V 0.47U	2	
C505,06	ECA1HPXS4R7B	50V 4.7U	2	
C508	ECA1CAM332E	16V 3300U	1	
C509	ECBT1E103ZF	25V 0.01U	1	
C510	ECA1HPXSR33B	50V 0.33U	1	
C551,52	ECKR1H103ZF5	50V 0.01U	2	
C601-04	ECBT1E103ZF	25V 0.01U	4	
C610	RCE1VKA100BG	35V 10U	1	
C651-54	ECQV1H223JZ3	50V 0.022U	4	
C655-58	ECKR1H181KB5	50V 180P	4	
C659,60	ECBT1H102KB5	50V 1000P	2	
⚠ C701-04	ECEMX71333HZ	71V 33000U	4	
⚠ C705-08	EEUPL2A101E	100V 100U	4	
C713,14	ECQE2104KF3	250V 0.1U	2	
C715,16	ECKR1H103ZF5	50V 0.01U	2	
C717,18	ECQE2104KF3	250V 0.1U	2	
C719,20	ECA1HPXS010B	50V 1U	2	
⚠ C751,52	ECA1EM471	25V 470U	2	
CN301,02	SJS50878JQ	CONNECTOR(8P)	2	
CN303,04	SJS50578JQ	CONNECTOR(5P)	2	
CN602	SJS50581BB	CONNECTOR(5P)	1	
CP1-P4	RJP1A4204-1	CONNECTOR(3P)	4	
CP201,02	SJT3611	CONNECTOR(6P)	2	
CP301,02	SJT30845JQ	CONNECTOR(8P)	2	
CP303,04	SJT30545JQ	CONNECTOR(5P)	2	
CP351,52	RJP1A3202	CONNECTOR(2P)	2	
CP401,02	SJT3319	CONNECTOR(3P)	2	
CP403	SJT3011	CONNECTOR(11P)	1	
CP405,06	SJT3415	CONNECTOR(4P)	2	
CP501,02	SJT3215	CONNECTOR(2P)	2	
CP551	SJT3513	CONNECTOR(5P)	1	
CP601	SJT3007	CONNECTOR(10P)	1	
CP602	SJT30549BB1	CONNECTOR(5P)	1	
CP603	SJT3417	CONNECTOR(4P)	1	
CP651,52	RJP1A4103	CONNECTOR(2P)	2	
CP653	SJT3319	CONNECTOR(3P)	1	
CP655,56	RJP1A3202	CONNECTOR(2P)	2	
CP701-04	RJP1A3303	CONNECTOR(3P)	4	
CP191A	RJP1A9103	CONNECTOR(3P)	1	

Ref.No.	Part No.	Part Name & Description	Pcs	Remarks
CP191B	RJP1A9103	CONNECTOR(3P)	1	
⚠ D207,08	MA4160M	DIODE	2	
D253-56	MA165	DIODE	4	
D257-60	MA4100M	DIODE	4	
D261-64	MA185TA	DIODE	4	
D265-68	MA165	DIODE	4	
D301-04	MA4100M	DIODE	4	
D305-08	MA29WA	DIODE	4	
D401,02	MA185TA	DIODE	2	
D451	MA185TA	DIODE	1	
D452	MA4110M	DIODE	1	
D453	MA165	DIODE	1	
D501	MA165	DIODE	1	
D502	MA4062M	DIODE	1	
D503,04	MA165	DIODE	2	
⚠ D505,06	MA4100M	DIODE	2	
D507,08	MA165	DIODE	2	
D601-17	MA165	DIODE	17	
D618-20	LN846RP-C	LED	3	
D621	LN446YP	LED	1	
D622	LN846RP-C	LED	1	
D623	MA4036M	DIODE	1	
D624-26	MA165	DIODE	3	
D627-29	MA4051MTA	DIODE	3	
D640,41	MA185TA	DIODE	2	
D651-53	MA165	DIODE	3	
⚠ D701-08	EGP30DL6414	DIODE	8	
⚠ D751-54	1SR35200TB	DIODE	4	
E701,02	SNE1004-2	GND PLATE	2	
⚠ F1,F2	XBA2C20TB0	FUSE,T2A	2	
IC201,02	AN7062N	IC	2	
IC301,02	M5219P	IC	2	
IC451	AN7073	IC	1	
IC501	BA6138	IC	1	
IC502	M5218AP	IC	1	
IC601	TC4001BPN	NOR GATE	1	
JK101	RJH2402A	TERMINAL	1	
JK651,52	RJH4411	SPEAKER TERMINAL	2	
JK653	QJA0455ZC-A	H.P JACK	1	
⚠ L1	SLQZ650MH49	NOISE FILTER	1	
L191-94	ELEPK101KA	COIL,CHOKE	4	
L351,52	SLQY07G-40	COIL,CHOKE	2	
L353,54	SLQY18G-10	COIL,CHOKE	2	
L651-54	SLQY07G-40	COIL,CHOKE	4	
P1	RPG4057	PACKING CASE	1	
P2	RPN0687	CUSHION	1	
P3	RPH0101	CRAFT PAPER	1	
P4	SPH6434	PROTECTION SHEET	1	
P5	RPQ0164	PAD	1	
P6	XZB25X34C03X	PROTECTION BAG	1	
P7	RPH0032	CRAFT PAPER	1	
P8	RPF0139	POLYETHYLENE COVER	1	
PL501-16	XAMR128S-1	LAMP	16	
Q201-04	2SA1123RSTTA	TRANSISTOR	4	
Q205-08	2SC2631RSTTA	TRANSISTOR	4	
Q209,10	2SA1123RSTTA	TRANSISTOR	2	
Q253,54	2SD1761EF	TRANSISTOR	2	
Q255,56	2SC2458-A	TRANSISTOR	2	
Q257,58	2SA1048ABCTA	TRANSISTOR	2	
Q259,60	2SC2631RSTTA	TRANSISTOR	2	
Q261,62	2SA1123RSTTA	TRANSISTOR	2	
Q263,64	2SK20130Y	TRANSISTOR	2	
Q265,66	2SJ3130Y	TRANSISTOR	2	
Q301,02	2SC2631RSTTA	TRANSISTOR	2	
Q303-06	2SA1123RSTTA	TRANSISTOR	4	
Q307,08	2SC2631RSTTA	TRANSISTOR	2	
Q351,52	2SC1815BG	TRANSISTOR	2	
Q353,54	2SC3944AQRS	TRANSISTOR	2	
Q355,56	2SA1535AQRS	TRANSISTOR	2	

Ref.No.	Part No.	Part Name & Description	Pcs	Remarks
Q357,58	2SC5198R	TRANSISTOR	2	
Q359,60	2SA1941R	TRANSISTOR	2	
Q361,62	2SC5198R	TRANSISTOR	2	
Q363,64	2SA1941R	TRANSISTOR	2	
Q401,02	2SB1036R	TRANSISTOR	2	
Q451	2SA992EFPTA	TRANSISTOR	1	
Q503	2SA1048ABCTA	TRANSISTOR	1	
Q601,02	2SA1048ABCTA	TRANSISTOR	2	
Q603,04	2SC2458-A	TRANSISTOR	2	
Q651	2SC2458-A	TRANSISTOR	1	
R103,04	ERDS2FJ334	1/4W 330K	2	
R191-94	ERDS2FJ561	1/4W 560	4	
R195,96	ERDS2FJ222	1/4W 2.2K	2	
R201,02	ERDS2FJ471	1/4W 470	2	
R203,04	ERDS2FJ183	1/4W 18K	2	
R205,06	ERDS2FJ122	1/4W 1.2K	2	
R207,08	ERDLS2VJ183T	1/4W 18K	2	
R209,10	ERDS2FJ561	1/4W 560	2	
R211-14	ERDS2FJ101	1/4W 100	4	
R215,16	ERDS2FJ473	1/4W 47K	2	
⚠ R217,18	ERDS1FJ822	1/2W 8.2K	2	
R219-22	ERDS2FJ101	1/4W 100	4	
R223,24	ERDS2FJ332	1/4W 3.3K	2	
R225,26	ERDS2FJ333	1/4W 33K	2	
R227,28	ERDS2FJ332	1/4W 3.3K	2	
R229,30	ERDS2FJ333	1/4W 33K	2	
R253,54	ERDS2FJ472	1/4W 4.7K	2	
R255,56	ERDS2FJ151	1/4W 150	2	
R257,58	ERDS2FJ271	1/4W 270	2	
R261-64	ERDS2FJ273	1/4W 27K	4	
R265-68	ERDS2FJ101	1/4W 100	4	
R269,70	ERDS2FJ182	1/4W 1.8K	2	
R271-74	ERDS2FJ2R2	1/4W 2.2	4	
R275-78	ERDS2FJ271	1/4W 270	4	
R301,02	ERDS2FJ182	1/4W 1.8K	2	
R303,04	ERDS2FJ121	1/4W 120	2	
R305,06	ERDS2FJ182	1/4W 1.8K	2	
R307,08	ERDS2FJ121	1/4W 120	2	
R309-12	ERDS2FJ100	1/4W 10	4	
R313-16	ERDS2FJ332	1/4W 3.3K.	4	
R317-20	ERDS2FJ561	1/4W 560	4	
R321,22	ERDS2FJ104	1/4W 100K	2	
R323,24	ERDS2FJ1R0	1/4W 1	2	
R325,26	ERDS2FJ102	1/4W 1K	2	
R327,28	ERDS2FJ182	1/4W 1.8K	2	
R329,30	ERDS2FJ101	1/4W 100	2	
R351,52	ERDAF2VJ103T	1/2W 10K	2	
R353,54	ERDS2FJ332	1/4W 3.3K	2	
R355-58	ERDS2FJ681	1/4W 680	4	
R359-66	ERDS2FJ2R2	1/4W 2.2	8	
R367-74	RRECMKR22SC	5W 0.22	8	
R375,76	ERG1SJ100E	1W 10	2	
R377-84	RRECMKR22SC	5W 0.22	8	
R385-92	ERG1SJ100E	1W 10	8	
R393,94	ERDS2FJ100	1/4W 10	2	
R397,98	ERDS2FJ331	1/4W 330	2	
R401,02	ERDS2FJ271	1/4W 270	2	
R403,04	ERDS2FJ472	1/4W 4.7K	2	
R405,06	ERDS2FJ153	1/4W 15K	2	
R451	ERDS2FJ563	1/4W 56K	1	
R452	ERDS2FJ473	1/4W 47K	1	
R453	ERDS2FJ273	1/4W 27K	1	
R454	ERDS2FJ153	1/4W 15K	1	
R455	ERDAS3J103T	1/4W 10K	1	
R456	ERDS2FJ153	1/4W 15K	1	
R457	ERDS2FJ561	1/4W 560	1	
⚠ R501,02	ERDS1FJ472	1/2W 4.7K	2	
R503,04	ERDS2FJ271	1/4W 270	2	
R505,06	ERDS2TJ155	1/4W 1.5M	2	
R507,08	ERDS2FJ682	1/4W 6.8K	2	
R509-12	ERDS2FJ471	1/4W 470	4	
R513	ERDS2FJ104	1/4W 100K	1	
R515	ERDS2FJ563	1/4W 56K	1	
R516	ERDS2FJ681	1/4W 680	1	
R517	ERDS2FJ332	1/4W 3.3K	1	
R518,19	ERDAS3J103T	1/4W 10K	2	
R520	ERDS2FJ223	1/4W 22K	1	

Ref.No.	Part No.	Part Name & Description	Pcs	Remarks
R521	ERDS2FJ104	1/4W 10K	1	
R523,24	ERDS2FJ154	1/4W 150K	2	
R525,26	ERDS2FJ223	1/4W 22K	2	
R527,28	ERDS2FJ102	1/4W 1K	2	
R529,30	ERDS2FJ123	1/4W 12K	2	
R531,32	ERDAS3J103T	1/4W 10K	2	
R601-04	ERDS2FJ473	1/4W 47K	4	
R605	ERDS2FJ223	1/4W 22K	1	
R606,07	ERDS2FJ472	1/4W 4.7K	2	
R608,09	ERDS2FJ223	1/4W 22K	2	
R610	ERDAS3J103T	1/4W 10K	1	
R611	ERDS2FJ473	1/4W 47K	1	
R612	ERDS2FJ221	1/4W 220	1	
R613	ERDS2FJ331	1/4W 330	1	
R616	ERDS2FJ221	1/4W 220	1	
R617	ERDS2FJ331	1/4W 330	1	
R619	ERDS2FJ221	1/4W 220	1	
R620	ERDS2FJ331	1/4W 330	1	
R621	ERDS2FJ471	1/4W 470	1	
R622	ERDS2FJ331	1/4W 330	1	
R623	ERDS2FJ471	1/4W 470	1	
R624	ERDS2FJ151	1/4W 150	1	
R651	ERDS2FJ472	1/4W 4.7K	1	
R655,56	ERG1SJ181	1W 180	2	
R657,58	ERG1SJ151	1W 150	2	
⚠ R659,60	ERD2FCG121	1/4W 120	2	
R661	ERDS2FJ221	1/4W 220	1	
R701-04	ERDS2FJ6R8	1/4W 6.8	4	
R751,52	ERDS2FJ2R2	1/4W 2.2	2	
⚠ RL651,52	RSY0004-1	RELAY	2	
⚠ RL653	RSYG5A237P12	RELAY	1	
⚠ S1	ESB8279V	SW,POWER	1	
S551	RSS2B032-A	SW,METER LIGHT	1	
S601-04	EVQ21405R	SW,PUSH	4	
⚠ T1	RTP1P5B010-W	POWER TRANSFORMER	1	(EB)
⚠ T1	RTP1P5E029-W	POWER TRANSFORMER	1	(E,EG)
⚠ T2	RTP1P5B010-W	POWER TRANSFORMER	1	(EB)
⚠ T2	RTP1P5E029-W	POWER TRANSFORMER	1	(E,EG)
TH251,52	ERTD2ZGL251T	THERMISTOR	2	
TH351,52	ERTD2ZHL104T	THERMISTOR	2	
TH501,02	ERTD2ZHL104T	THERMISTOR	2	
VR191,92	EWCPCC017A24	VR,LEVEL CONTROL	2	
VR251,52	EVNDCAA03B13	VR,V-AMP ICQ ADJ.	2	
VR301,02	EVNDCAA03B52	VR,C-AMP ICQ ADJ.	2	
VR501,02	EVNDXAA00B13	VR,POWER METER ADJ.	2	

Ref.No.	Part No.	Part Name & Description	Pcs	Remarks

■ Cabinet Parts Location

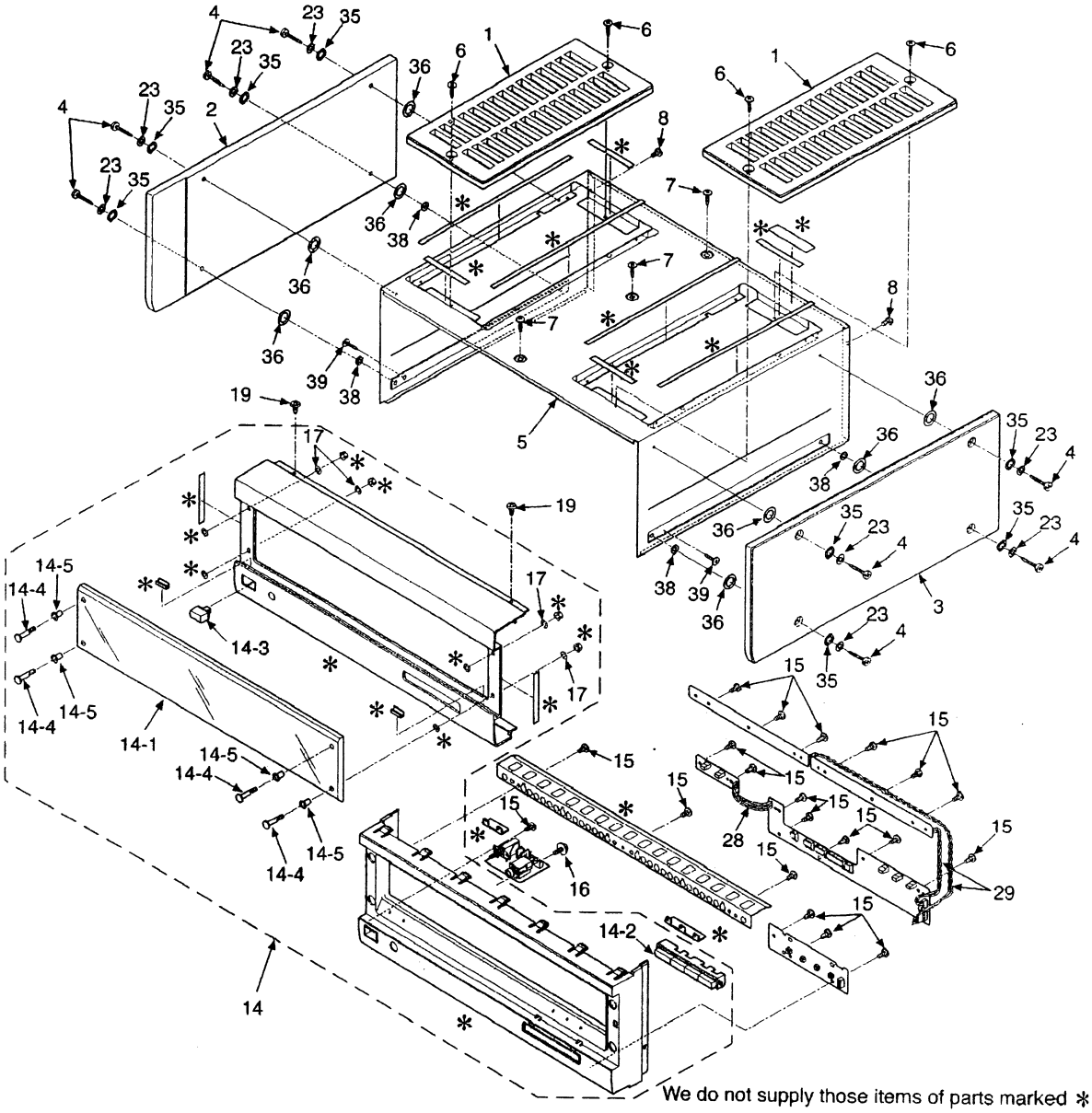

We do not supply those items of parts marked ∗.

Ref.No.	Part No.	Part Name & Description	Pcs	Remarks
1	RGK0397-N	CABINET	2	
2	RGK0558-M	SIDE PANEL(L)	1	
3	RGK0559-M	SIDE PANEL(R)	1	
4	RHD30034	SCREW	8	
5	RKM0226-N	CABINET	1	
6	SNE2095-4	SCREW	4	
7	SNE2129-2	SCREW	3	
8	XTBS3+8JFB1	SCREW	60	

Ref.No.	Part No.	Part Name & Description	Pcs	Remarks
9	RKA0035	FOOT	4	
10	RGR0272E-A	REAR PANEL	1	
11	RMA0250A	ANGLE(L)	1	
12	RMA0251A	ANGLE(R)	1	
13	RSE0003	METER	1	
14	RYP0870-N	FRONT PANEL ASS'Y	1	
14-1	RGK0557-T	TRANSPARENT GLASS	1	
14-2	RGU0512C-N	BUTTON,SP	1	
14-3	RGU0890-N	BUTTON,POWER	1	

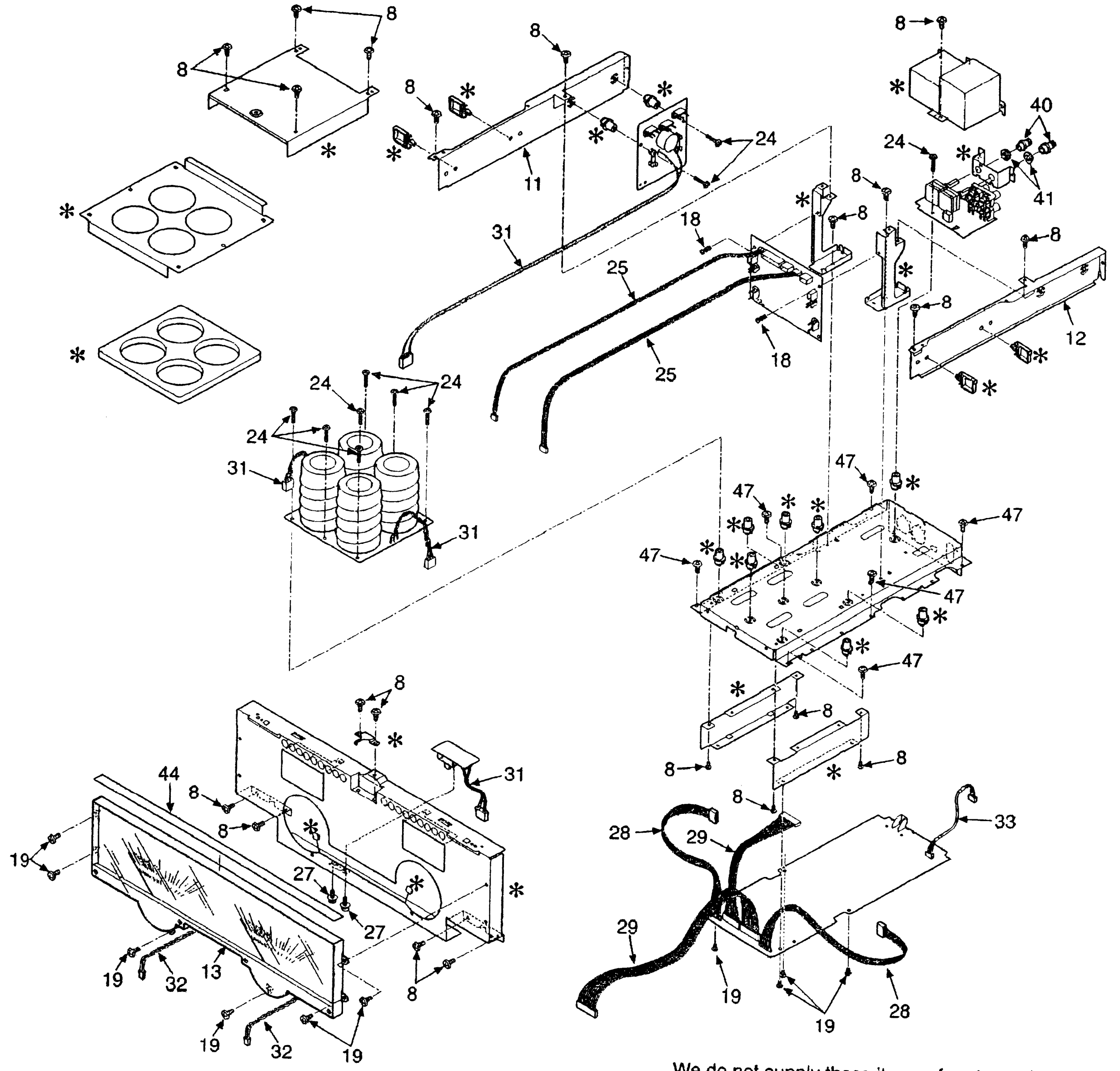

We do not supply those items of parts marked *.

Ref.No.	Part No.	Part Name & Description	Pcs	Remarks
14-4	RHD30042-2	SCREW	4	
14-5	RMG0308-K	BUSH	4	
15	XTBS26+8J	SCREW	16	
16	XTWS3+8T	SCREW	1	
17	XWG3	WASHER	4	
18	SHR415	LATCH	2	
19	XTB3+8JFZ	SCREW	16	
20	SKYD4	WASHER	4	
21	SNE2117-1	SCREW	16	

Ref.No.	Part No.	Part Name & Description	Pcs	Remarks
22	XYN3+F8	SCREW	1	
23	XWE6FZ	WASHER	8	
24	XTB3+20JFZ	SCREW	1	
25	REZ0582-1	WIRE KIT	1	
26	REZ1130	WIRE KIT	1	
27	XYN26+C4	SCREW	2	
28	REZ0584	WIRE KIT	1	
29	REZ0585-2	WIRE KIT	1	
31	REZ1129	WIRE KIT	1	

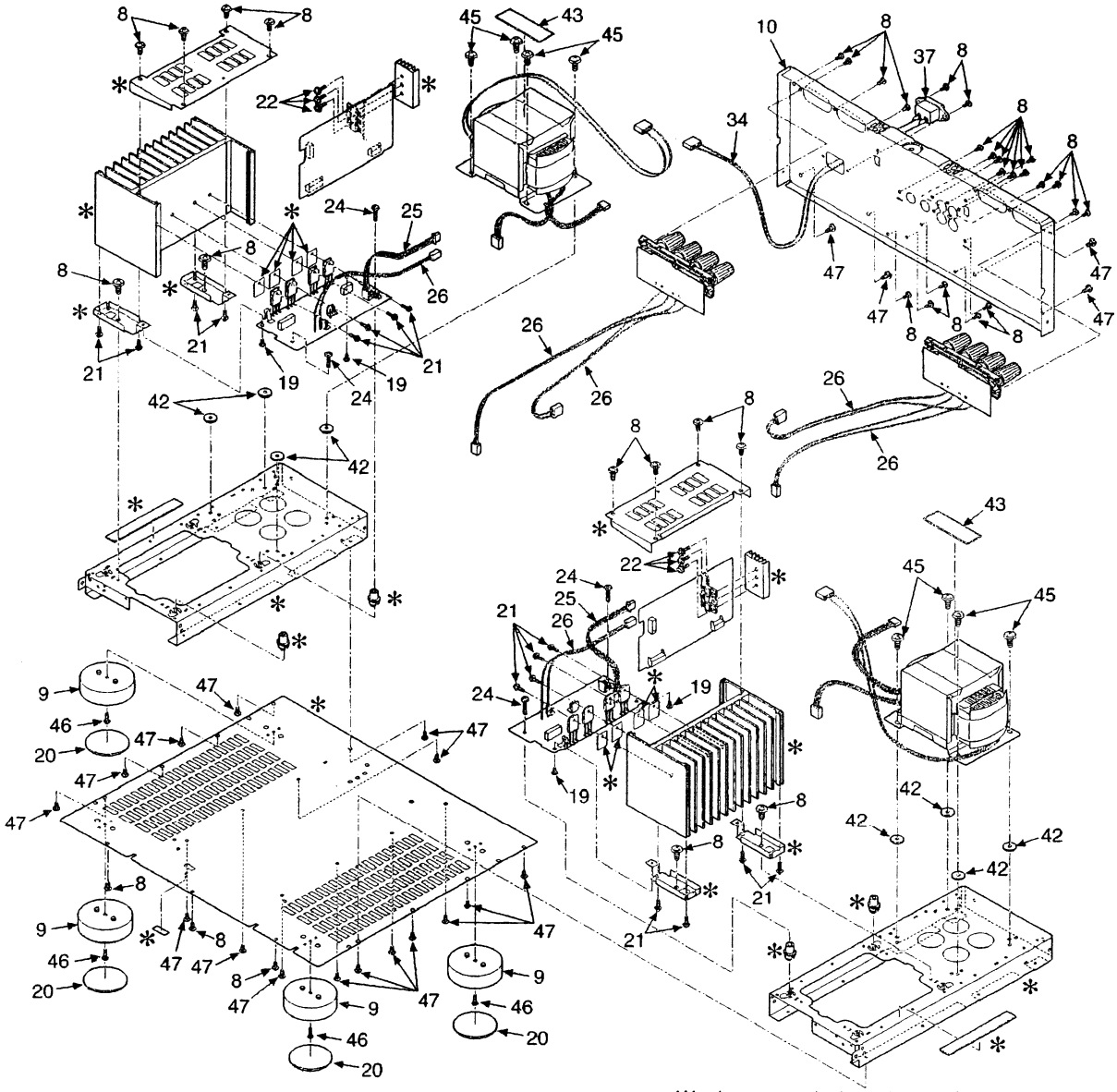

We do not supply those items of parts marked ✻.

Ref.No.	Part No.	Part Name & Description	Pcs	Remarks
32	REZ0586-1	WIRE KIT	1	
33	REZ1128	WIRE KIT	1	
34	REZ1138	WIRE KIT	1	
35	RHW85001	WASHER	8	
36	RMG0350-K	GUM	8	
⚠ 37	RJS2A6702	AC INLET	1	
38	RMX0086	SPACER	4	
39	SNE2095-5	SCREW	2	
40	RGW0205-S	KNOB,LEVEL CON.	2	

Ref.No.	Part No.	Part Name & Description	Pcs	Remarks
41	RHN90001	NUT	1	
42	RMG0321-K	BUM,TRANSFORMER	1	
43	RQLA0203	SEAL,TRANSFORMER	2	
44	SDU35-1	FILTER	1	
45	XTB4+10FFZ	SCREW	8	
46	XTB4+20FFZ	SCREW	4	
47	XTB4+8FFB	SCREW	16	

■ Packaging

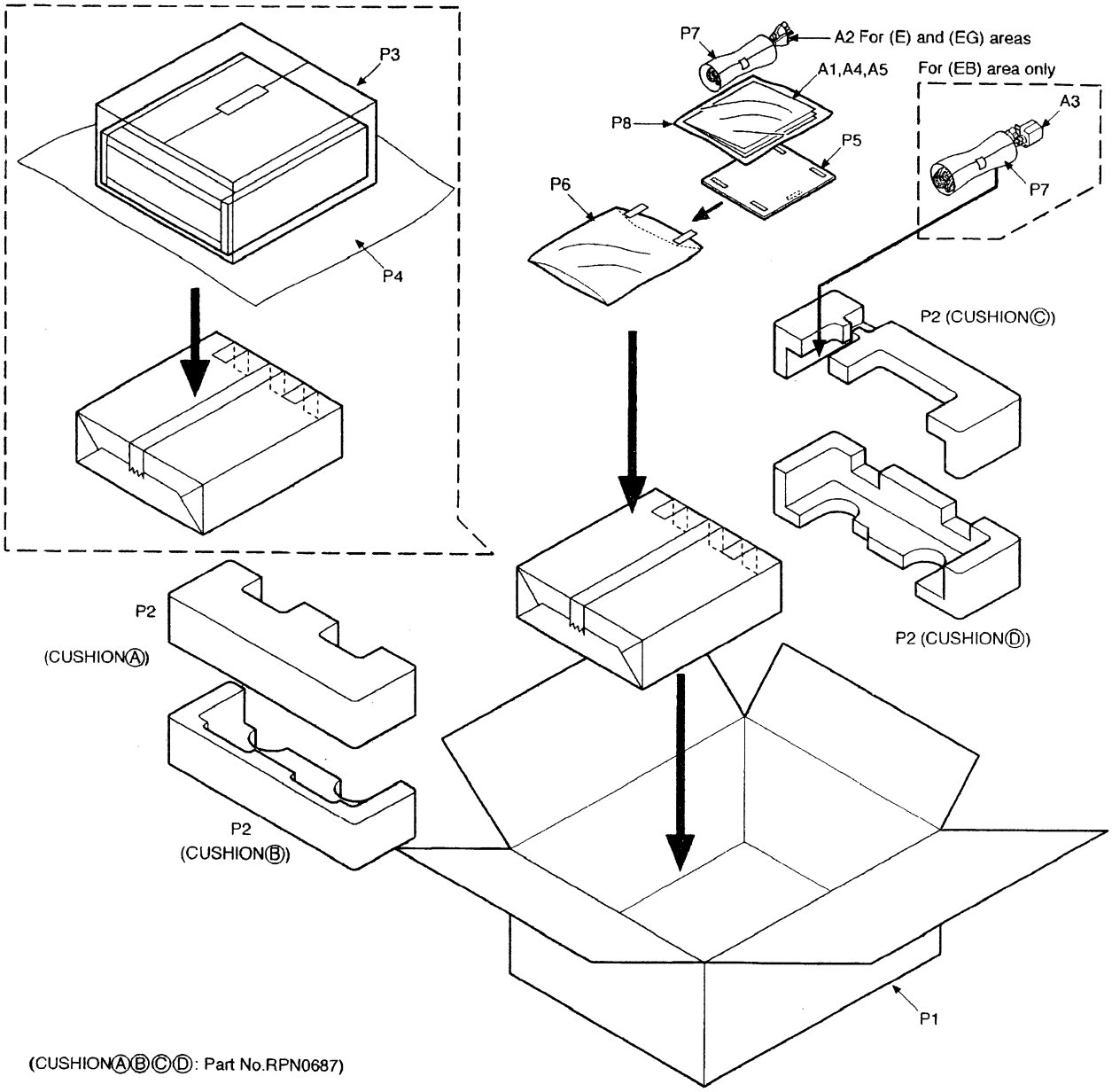

(CUSHIONⒶⒷⒸⒹ: Part No.RPN0687)

Ref.No.	Part No.	Part Name & Description	Pcs	Remarks
A1	RQT4617-E	INSTRUCTION MANUAL	1	(E)(EB)<IA>
A1	RQT4619-D	INSTRUCTION MANUAL	1	(EG)<IB>
A1	RQT4620-H	INSTRUCTION MANUAL	1	(EG)<IC>
⚠ A2	RJA0062-K	AC POWER SUPPLY CORD	1	(E)(EG)
⚠ A3	RJA0063-K	AC POWER SUPPLY CORD	1	(EB)
A4	RQCB0169	SERVICENTER LIST	1	
A5	RQA0117	WARRANTY CARD	1	

Ref.No.	Part No.	Part Name & Description	Pcs	Remarks
P1	RPG4057	PACKING CASE	1	
P2	RPN0687	CUSHION	1	
P3	RPH0101	CRAFT PAPER	1	
P4	SPH6434	PROTECTION SHEET	1	
P5	RPQ0164	PAD	1	
P6	XZB25X34C03X	PROTECTION BAG	1	
P7	RPH0032	CRAFT PAPER	1	
P8	RPF0139	POLYETHYLENE COVER	1	

Printed in Japan
F980907400YM/KH/YI(D)